SERVICE MANUAL

FULL AND HALF DICE

ICE CUBE MAKERS - **UNDERCOUNTER MODELS**

NG 50
NG 70
NG 100
NG 150

ICE CUBE MAKERS **- MODULAR MODELS**

MODULAR 220
MODULAR 400-22

INDEX

1. INTRODUCTION 4
1.1.- Warning 4
1.2.-Reception of the machine 6
2. INSTALLATION 8
2.1.- Placing of the ice maker 8
2.2.-Levelling of the ice maker 8
2.3.-Installation of modular equipments on top of bins 9
2.4.-Minimum distance to obstacles 9
2.5.- Water supply connection 10
2.6.-Drain connection 11
2.6.1 – DRAIN FORCED CONNECTION 11
2.7.- Electrical connection 12
3. PRIOR CHECKING AND START-UP 13
3.1.- Prior checking 13
3.2.- Start-Up 13
4. SEQUENCE OF OPERATION UNDERCOUNTER MODELS (NG) 15
4.1.- Undercounter control board 15
4.2.- Alarms 17
4.2.1 Safety high pressure switch 18
4.2.2 Long harvest 18
4.2.3 Ice production cycle timeout 18
4.2.4 Faulty temperature probe 18
4.3 PCB push button function 18
4.4 DRAIN FORCED 19
4.4.1 SEQUENCE OF OPERATION 19
4.4.2 CONTROL BOARD 21
5. SEQUENCE OF OPERATION -MODULAR MODELS 22
5.1.- Initial Start-up 22
5.2.-MS Control Board 24
5.3.- Alarms 27
5.4.- Notice legend 27
5.5.- alarm history 28
5.6.- Service signal 28

5.7.- Safety pressure 29
5.8.- Long harvest 29
5.8.-Ice production cycle timeout 29
5.10.-Short production cycle 29
5.11.-Water filling timeout 29
5.12.- Machine Stacking 30
6 REFRIGERATION DIAGRAM 32
7 MAINTENANCE AND CLEANING PROCEDURES 33
7.1.- Cleaning water distribution system for under counter models (NG) 33
7.2.- Cleaning water distribution system for modular models 36
7.3.- Cleaning the bins (for undercounter models) 39
7.4.- Cleaning the condenser 39
7.5.- External cleaning of the machine 40
7.6.- Water leakage checking 40
8 TECHNICAL SPECIFICATIONS 41
8.1.- Dimensions 42
9 USER TROUBLESHOOTING GUIDE 43
9.1.- Undercounter models 43
9.2.- Modular models 44

1. INTRODUCTION

You have purchased one of the most reliable ice-making products on the market today.

Carefully read the instructions contained in this manual since they provide important information relative to safety during installation, use, and maintenance.

1.1.- WARNING

This appliance is intended to be used in professional and similar applications.

The installation of this equipment should be done by the Service Department.

The socket should always be placed on an accessible location.

When positioning the appliance, ensure the supply cord is not trapped or damaged.

Do not locate multiple portable socket-outlets or portable power supplies at the rear of the appliance.

Always disconnect the power supply from the machine before any cleaning or maintenance service.

Any change needed on the electrical installation for the appropriate connection of the machine, should be exclusively performed by qualified and certified professional personnel only.

Any use by the ice maker not intended to produce ice, using potable water, is considered inappropriate.

It is extremely dangerous to modify or intend to modify this machine and will void warranty.

The appliance is not to be used by persons (including children) with reduced physical, sensory or mental capabilities, or lack of experience and knowledge, unless they have been given supervision or instruction.

Children being supervised not to play with the appliance.

Connect to potable water supply only.

This machine is not intended to be used outdoors nor exposed to the rain.

The machine should be connected using the power cord supplied with the equipment.

It is mandatory to ground the equipment to avoid possible electric shock on individuals or damages to the equipment. The machine should be grounded pursuant local and/or national regulations. The manufacturer shall be held harmless in case of damages arising due to the lack of the ground installation.

In order to assure the proper operation and efficiency of this equipment, it is extremely important to follow the recommendations of the manufacturer, especially those related to cleaning and maintenance operations, which should be performed by qualified personnel only.

CAUTION: The intervention of non-qualified personnel, besides of being dangerous, could result in serious malfunctioning. In case of damages, contact your distributor. We recommend always using original spare parts.

The company reserves the right to make changes in specifications and design without prior notice.

This signal indicates “Risk of fire / Flammable materials” because of the use of flammable refrigerant.

For compression-type appliances that use flammable refrigerants should additionally consider the substance of the warnings listed below:

- Keep ventilation openings, in the appliance enclosure or in the built-in structure, clear of obstruction.
- Do not use mechanical devices or other means to accelerate the defrosting process, other than those recommended by the manufacturer.
- Do not damage the refrigerant circuit.
- Do not use electrical appliances inside the food storage compartments of the appliance, unless they are of the type recommended by the manufacturer.
- Do not store explosive substances such as aerosol cans with a flammable propellant in this appliance.

In case of a flammable refrigerant leakage:

- Do not generate flames close to the appliance.
- Do not switch on/off or plug in/off the appliance.
- To ventilate immediately the area where appliance is located by opening doors and/or windows.
- To call to an authorized technical service.

Disposal of the ice maker: The company encourages to follow the regulations of each country regarding eco-friendly disposal of electric and electronic devices such this one. User who is

wanting to dispose of this equipment must contact the manufacturer and follow the method to appropriate differentiated collection for the subsequent treatments.

1.2.-RECEPTION OF THE MACHINE

Inspect the outside packing. In case of damages, make the corresponding claim to the carrier. To confirm the existence of damages, unpack the machine in the presence of the carrier and state any damage on the equipment on the reception document or freight document.

Always state the machine number and model. This number is printed on three locations:

(1) Packing: On the outside, it contains a label with the serial number.

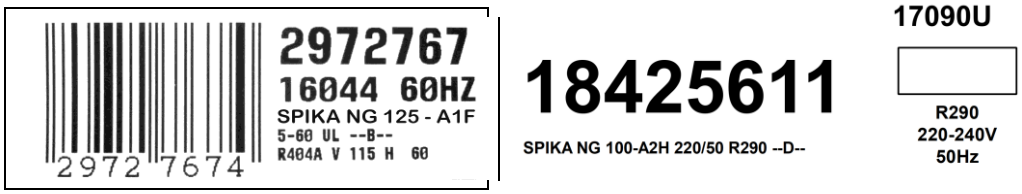

(2) Exterior of the unit: On the back panel of the unit, there is a label with the same characteristics as the previous one.

(3) Nameplate: On the back of the machine.

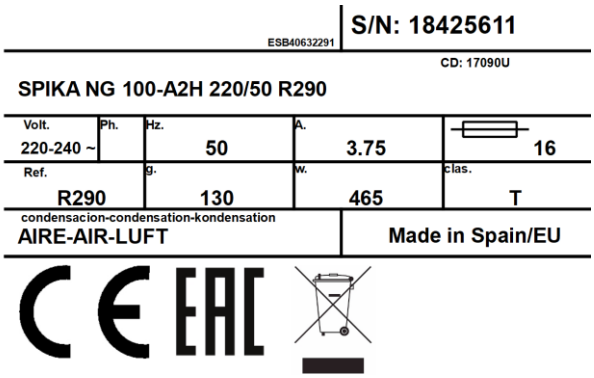

Check that in interior of the machine the installation kit is complete and comprises:

- Ice scoop
- ¾ inlet water hose
- 22 mm drain hose
- 1 filter
- User manual.

- Warranty and serial number.

CAUTION: All packing elements (plastic bags, carton boxes and wood pallets) should be kept outside the reach of children, as they are a source of potential hazard.

2. *INSTALLATION*

2.1.- PLACING OF THE ICE MAKER

This ice maker is not designed for outdoor operation. The icemaker should not be located next to ovens, grills or other high heat producing equipment.

The machines are designed to operate at room temperature between 10ºC and 43ºC . There may be some difficulties in ice slab removal under the minimum temperatures. Above the maximum temperature, the life of the compressor is shortened and the production is substantially lower.

The air cooled undercounter ice makers take the air through the front section, and drive it off through the back and also front louvers due to their new oblique condenser structure and placement . Do not place anything on the top of ice maker or facing the front grille. In case the front grille is either total or partially obstructed, or due to its placement it receives hot air from another device, we recommend, in case it is not possible to change the location, to install a water cooled machine.

The air cooled modular ice makers take the air through the back section and drive it off through the two lateral louvers. In the case it is not possible to respect the minimum distances recommended (see the picture in point 3.3) for these machines we recommend to install a water cooled unit.

The location must allow enough clearance for water, drain and electrical connections in the rear of the ice machine. It is important that the water inlet piping does not pass near sources of heat so as not to lose ice production.

The equipment is required to be sealed to the bin using FDA certified silicone or FDA certified gasket to establish proper sanitary operation. The contact between the top of the bin and the bottom of the ice maker must be uniformed and sealed to prevent water from reaching inaccessible areas.

2.2.-LEVELLING OF THE ICE MAKER

Use a level on top of ice machine in order to ensure the equipment is perfectly leveled.

Screw the leveling legs onto the bottom of the ice machine as far as possible.

Move the machine into its final position.

Use a level on top of the ice machine. Adjust each leg as necessary to level the ice machine from front to back and side to side.

ATTENTION: There is an optional 90mm high casters kit that can be used in substitution of the standard legs. These wheels are supplied with the corresponding installation instructions.

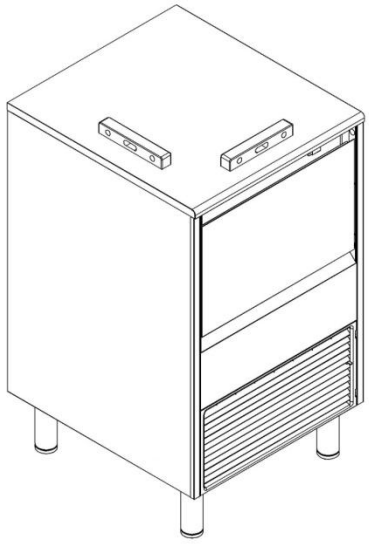

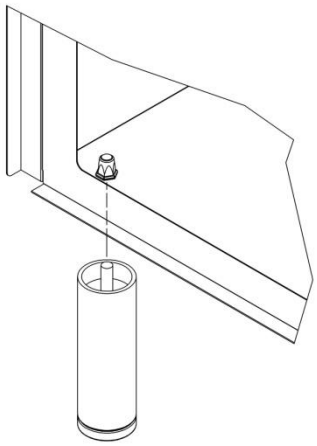

2.3.-INSTALLATION OF MODULAR EQUIPMENTS ON TOP OF BINS

Modular ice makers should be installed on top of bins, following the instructions contained in this manual.

The resistance and stability of the container-machine/s assembly should be verified as well as the fastening elements. Follow bin manufacturer instructions.

2.4.-MINIMUM DISTANCE TO OBSTACLES

Please see below the recommended minimum distances for proper operation and efficient service.

COMPACT MODELS

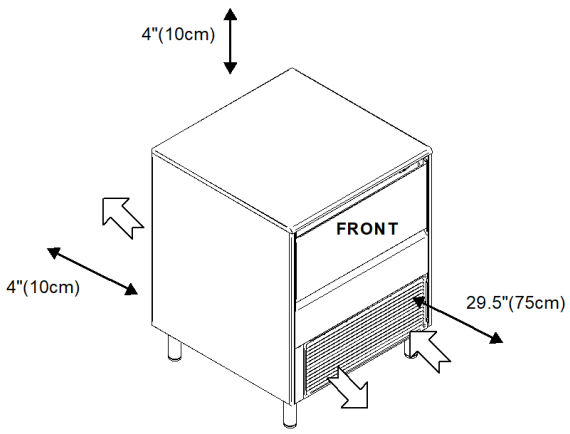

MODULAR MODELS

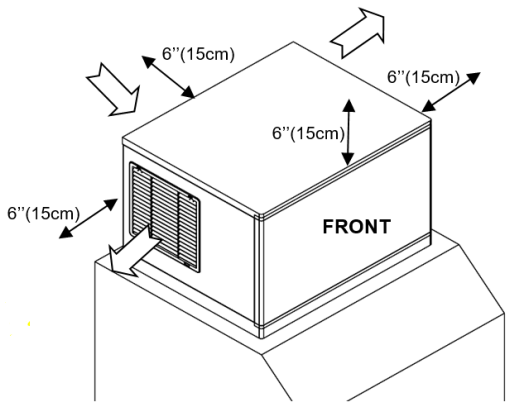

CONNECTION DIAGRAM:

The location must allow enough clearance for water drain and electrical connections in the rear of the ice machine.

UNDERCOUNTER MODELS

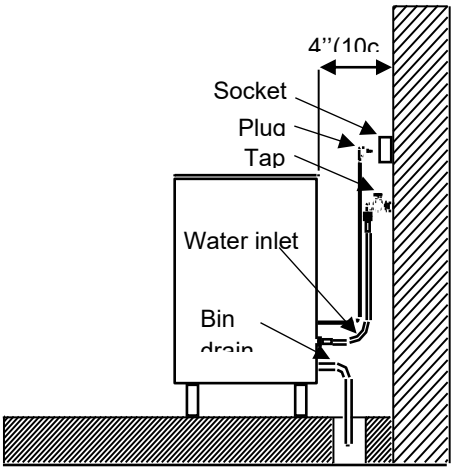

MODULAR MODELS

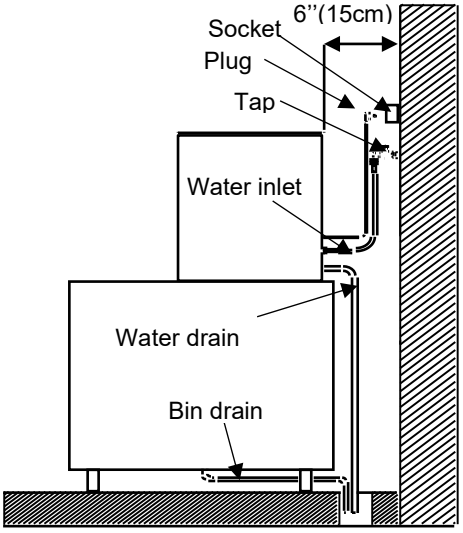

2.5.- WATER SUPPLY CONNECTION

The quality of the water supplied to the ice machine will have an impact on the time between cleanings and ultimately on the life of the product (mainly in water cooled units). It also will have a remarkable influence on the appearance, hardness and flavor of the ice.

Local water conditions may require treatment of the water to inhibit scale formation, improve taste and clarity. If you are installing a water filter system, refer to the installation instructions supplied with the filter system.

Pressure should be between 0.1 and 0.6 MPa (1 - 6 bar). If pressure overpasses such values, install a pressure regulator.

The water connection needs to be dedicated (only piece of equipment hooked to the water line). Water line from the water valve to the ice machine needs to be ¼" nominal ID tubing.

ATTENTION: The machine shall be plumbed (with adequate backflow protection) according to applicable national and local regulations.

2.6.-DRAIN CONNECTION

Drainage should be located lower to the machine level, at 150mm minimum.

It is convenient that the drain hose is 30mm inside diameter and with a minimum gradient of 3cm/metre, see figure.

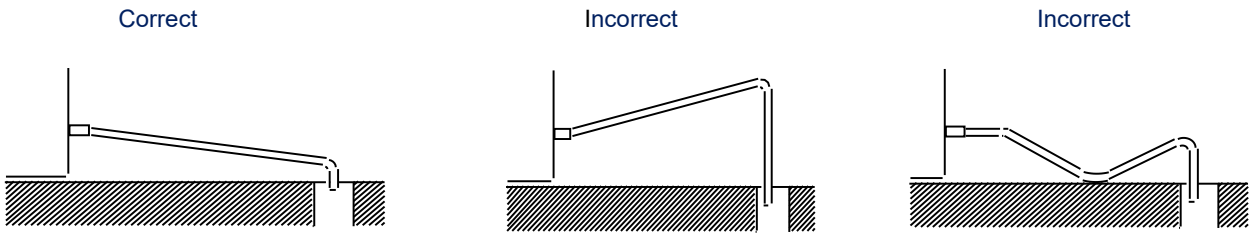

2.6.1 – DRAIN FORCED CONNECTION

This version of drain force allows an installation of the machine where the drain can be located 30 meters horizontally and 1.5 meters high from the machine's water outlet.

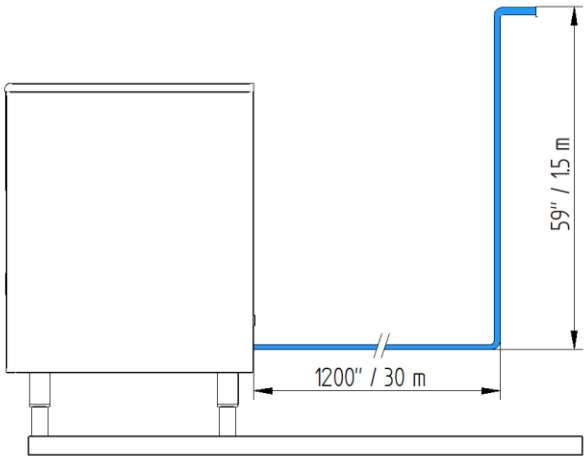

If the drain pipe runs incorrectly, the pump may not be able to drain the water, because the flow of the pump may be influenced due to the existence of stored air within the circuit.

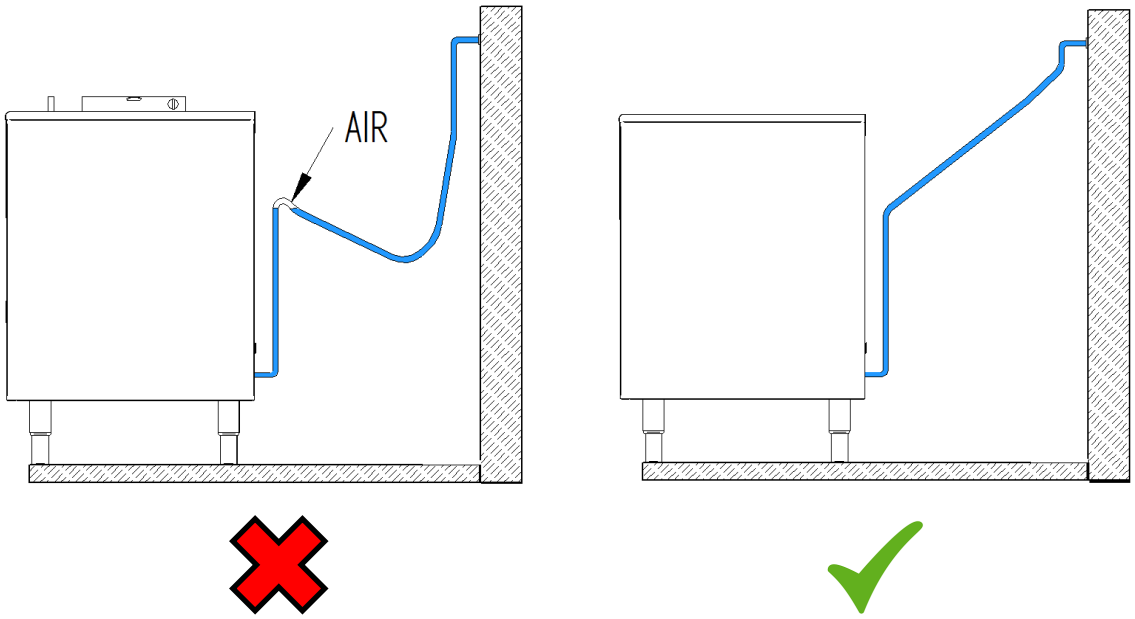

2.7.- ELECTRICAL CONNECTION

It is mandatory to ground the equipment. To avoid possible electric shock on individuals or damages to the equipment, the machine should be grounded pursuant local and/or national regulations as the case may be.

The manufacturer shall be held harmless in case of damages arising due to the lack of the ground installation.

In case the supply cable is damaged, it should be replaced by a cable of special assembly to be furnished by the manufacturer or after-sales service. Such replacement should be performed by qualified technical service only.

The machine should be places in such a way as to allow a minimum space between the back and the wall to allow an easy access and without risks to the cable plug.

Safeguard the socket. It is convenient to install adequate switches and fuses.

ATTENTION: The appliance requires an independent power supply of proper capacity. See the nameplate for electrical specifications. Failure to use an independent power supply of proper capacity can result in a tripped breaker, blown fuse, damage to existing wiring, or component failure. This could lead to heat generation or fire.

Voltage is indicated in the nameplate and on the technical specifications section of this manual. Variation on voltage above the 10% stated on the nameplate could result on damages or prevent the machine start-up.

3. *PRIOR CHECKING AND START-UP*

3.1.- PRIOR CHECKING

a) Is the machine leveled?

b) Voltage and frequency are the same as those on the nameplate?

c) Are the drains connected and operating?

d) Will the ambient temperature and water temperature remain in the following range?

	ROOM	WATER
MAXIMUM	43ºC	30ºC
MINIMUM	10ºC	10ºC

e) Is water pressure appropriate?

MINIMUM	0.1 MPa (1 bar)
MAXIMUM	0.6 MPa (6 bar)

In case inlet water pressure is higher than 0.6 MPa (6 bar), install a pressure regulator.

3.2.- START-UP

Once the installation instructions are followed (ventilation, site conditions, temperatures, water quality, etc.), proceed as follows:

1.- Open the water inlet. Verify the no existence of leakages.

2.- For under counter models open the door and remove the protection elements on the shield. For modular models remove the two locking screws on top of machine, take off the front panel and remove protection elements on the shield and also on the thickness sensor.

3.- Verify that the shield moves freely. For modular models verify also the thickness sensor moves freely. And the water tray is in place

4.- Connect the machine to the power supply.

5.- For under counter models: push the switch on the machine front side. For modular models: push the switch found on the back of the machine and then set the ice-wash switch to the position ice.

6.- Verify that there are no vibrations or frictions on the elements.

7.- Verify that the water fall to the evaporator is occurring uniformly and all ice cubes are properly watered.

8.- Close door (for under counter models) / Replace the front panel in its place (for modular models).

9.- For modular models: Verify the ice slab with the pictures below. In case the thickness sensor needs to be regulated, rotate the thickness adjustment screw CW to increase bridge thickness. Rotate CCW to decrease bridge thickness. For under counter models adjust the cycle time dip switches (see point 4.1).

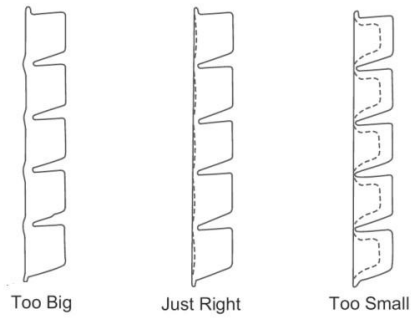

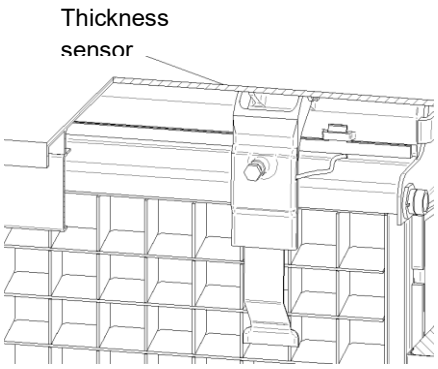

Damages due to the lack of maintenance and cleaning operations are not included on the warranty.

4. SEQUENCE OF OPERATION UNDERCOUNTER MODELS (NG)

Once you connect the machine there is a time delay of 2 minutes during which the water valve is activated to ensure the water tray is filled.

Once the time is up, the compressor starts and the pump which recirculates the water from the water tray to the upper distributor which provides a soft and uniform flow of water over the evaporator cells, in which the water starts freezing.

When the temperature probe at the end of the evaporator reaches an adjusted value Tc (-2/-4°C) , the fabrication continues the fixed time with the combination of dip-switches 1-4 (see table). This way we can ensure the filling of the evaporator is correct in different working conditions.

Once the fabrication is over the harvest phase starts. The pump stops, the hot gas valve open and the water inlet valve open only during the time fixed in the dip-switches 5-7. Water is sprayed over the back of the evaporator helping unstick the slab and precooling it for the next cycle. This heat recover enhances the machine's energetic efficiency.

Once the ice slab falls into the bin, the evaporator curtain opens and closes. A magnet placed on the side of this curtain activates the sensor and ends the harvest cycle, advancing to the fabrication cycle.

Once the ice bin is full, the slab does not go out completely, and this prevents the curtain from closing. If it remains open more than 60 seconds the machine goes into full bin state. All the components shut down until the ice is retired, the curtain closes, and a new cycle starts.

4.1.- UNDERCOUNTER CONTROL BOARD

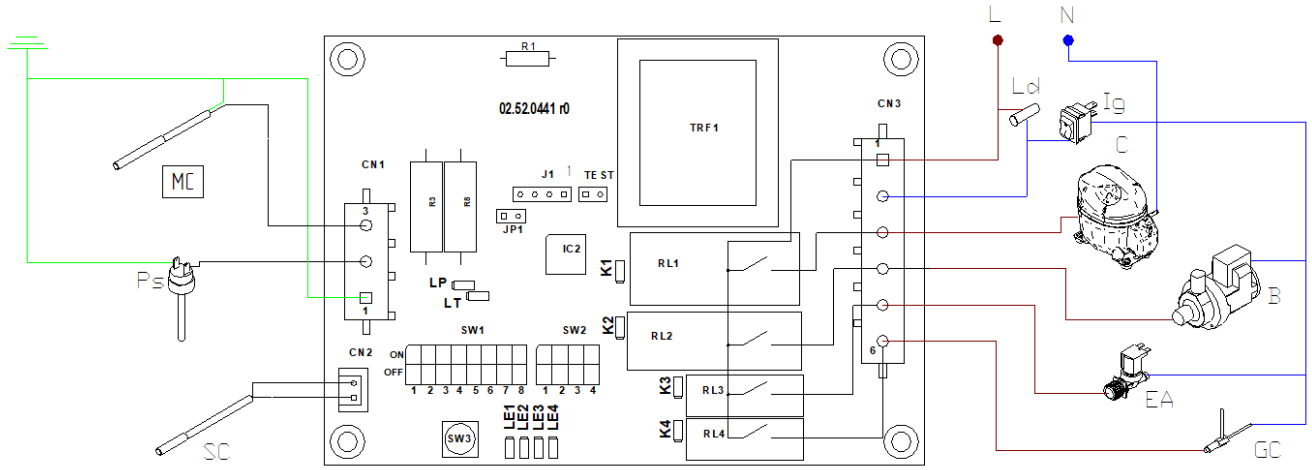

PCB connections	
Outputs	
C	compressor
B	Water pump
EA	Water inlet valve
GC	Hot gas valve.
Inputs	
SC	Evaporator temperature NTC probe
P	Safety pressure switch
MC	Curtain switch
N	PCB push button

LED signalling

Next to each out relay there is an orange led. Signals relay on

Next to each input terminal there is an orange led marking input active.

There are four additional red leds that signal machine status (continuous) or alarm (flashing)

Status signaling . Continuous led				
	LE1	LE2	LE3	LE4
Start up delay	X			
Ice cycle T>Tc	X	X		
Ice cycle T<Tc		X		
Harvest			X	
Full bin				X
Alarm signaling . Flashing led				
	LE1	LE2	LE3	LE4
Safety pressure switch	X			
Ice cycle timeout		X		
Harvest cycle timeout			X	
Faulty temperature probe				X

Dip switches setting

dip	Descripción (* factory setting)
1-4	tf - ice production timer. See table
5-7	tw - Water input timer. See table.
8	Tc - Evaporator temperature for timer start. ON=-2ºC / OFF=-4ºC
9	Not used

10	Safety high pressure switch trip function. ON= automatic reset (minimum stop 30 min.) OFF= manual reset (power OFF-ON)
11	Timeout alarms operation ON = activated OFF = unactivated
12	Software selection. **Important: Always OFF**

ICE / WATER TIMER SETTING									
SW1				TF (MIN)		SW1			TW (SEG)
1	2	3	4			5	6	7	
OFF	OFF	OFF	OFF	4		OFF	OFF	OFF	30
ON	OFF	OFF	OFF	6		ON	OFF	OFF	40
OFF	ON	OFF	OFF	8		OFF	ON	OFF	50
ON	ON	OFF	OFF	10		ON	ON	OFF	60
OFF	OFF	ON	OFF	12		OFF	OFF	ON	70
ON	OFF	ON	OFF	14		ON	OFF	ON	80
OFF	ON	ON	OFF	16		OFF	ON	ON	90
ON	ON	ON	OFF	18		ON	ON	ON	100
OFF	OFF	OFF	ON	20					
ON	OFF	OFF	ON	22					
OFF	ON	OFF	ON	24					
ON	ON	OFF	ON	26					
OFF	OFF	ON	ON	28					
ON	OFF	ON	ON	30					
OFF	ON	ON	ON	32					
ON	ON	ON	ON	34					

4.2.- ALARMS

They detect operational malfunctions. They are indicated with the flashing status Leds LE1-4.
During some alarms a second operation retry attempt is carried out and if repeated again, the machine will stop. Signaling should be indicated since the first failure occurs. If the second retry attempt is ok, the signaling will switch off.
In case that a machine stop has been caused by alarm, the reset is done by switching OFF and ON the main switch. If the dip-switch 11 OFF, time alarms are not to be followed.

4.2.1 SAFETY HIGH PRESSURE SWITCH

When the pressure contact (P) trips, instantly, all outputs switch over to off position.
When it is closed again, there are two possibilities:

- Dip-switch 10 OFF. Manual reset. The machine remains stopped until reset to Initial start-up.

- Dip-switch 10 ON. Automatic reset. The machine check pressure switch status every 30 min. When closed, the machine will continue at the position where it was.

* Signalling: Flashing LE1.

4.2.2 LONG HARVEST

If the harvest time is longer than 4 min. without activation of the curtain micro contact (MC), the harvest is interrupted, switching over to the production cycle. If the same happens again at the next harvest, the machine will stop.
* Signalling: Flashing in LE3.

4.2.3 ICE PRODUCTION CYCLE TIMEOUT

If during the production cycle, evaporator temperature probe has not reached the set temperature Tc in more than 60 min, the machine will stop until reset.

* Signalling: Flashing in LE2.

4.2.4 FAULTY TEMPERATURE PROBE

If PCB detects that evaporator temperature probe is broken or unconnected, the machine will stop

* Signalling: Flashing in LE4.

Probe type is NTC and resistance value must be 10kΩ at 25°C.

4.3 PCB PUSH BUTTON FUNCTION

Function depends on the unit status:

- Start up timer: Finish initial delay y passes to ice production stage

- Ice production. Switches to harvest

- Harvest. Switches to Ice production

<u>Wash cycle activation.</u>

Keep pressed the button while switching on main front switch. Wash cycle is activated and only the water recirculation pump is running. There is a maximum time for this cycle of 30 min. After this time, pump stops.

Wash cycle is finished by switching off main power.

Read cleaning and sanitizing instructions for proper usage of this function.

4.4 DRAIN FORCED

4.4.1 SEQUENCE OF OPERATION

While the machine is turn on, there is water that need to be evacuated between each cycle. There are 2 possible outlet water, one is if the ice in the storage bin melts (#1) and the other is when the production time ends, the water electro valve opens and fills the water tray(#2) to renovate the water. The excess of water goes out by the overflow (#3) to the drain force water reservoir (#4).

When the water reservoir is full of water covering the 2 electrodes (#5), the pump (#6) turns on and evacuates water for 5 seconds. After 5 seconds, the pump turns off if the electrodes are not covered by the water, otherwise, the pump will start again for 5 seconds.

In case that the system does not work for any issue, the water will flood the ice bin. There is a ventilation tube (#7) that allows the system to remove any air that may remain in the water reservoir. The Vent tube must be always over the mouth of the front door (#8).

In case that the pump works for 5 minutes continuously, it will stop for 5 seconds automatically in order to refrigerate.

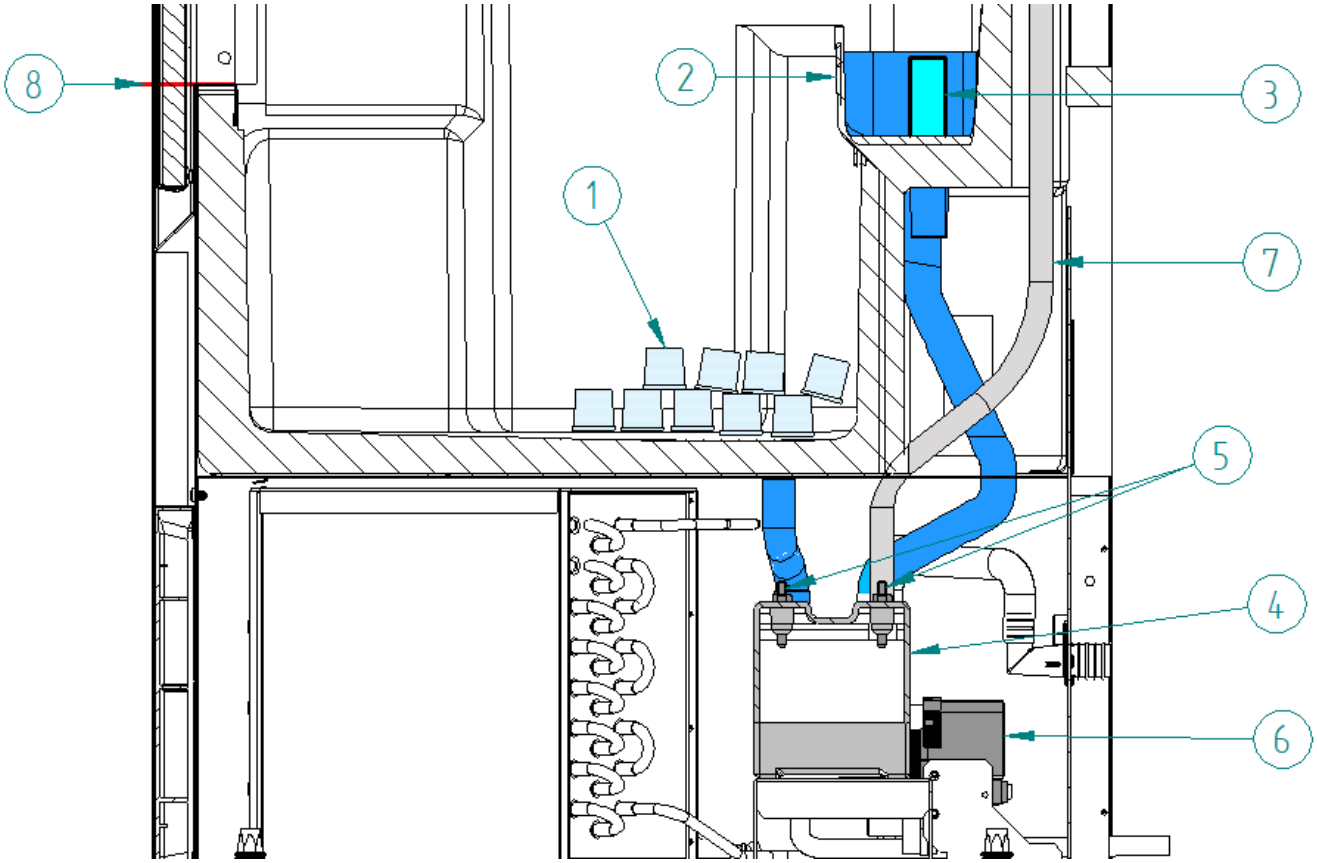

The system has a way to evacuate the water inside the water reservoir in a manual way. There is a plug (#9) in one of the plastic tube, by retiring this plug, it is possible to evacuate all the water.

Also, the system has a Check valve(#10) that does not allow the water to came back to the water reservoir.

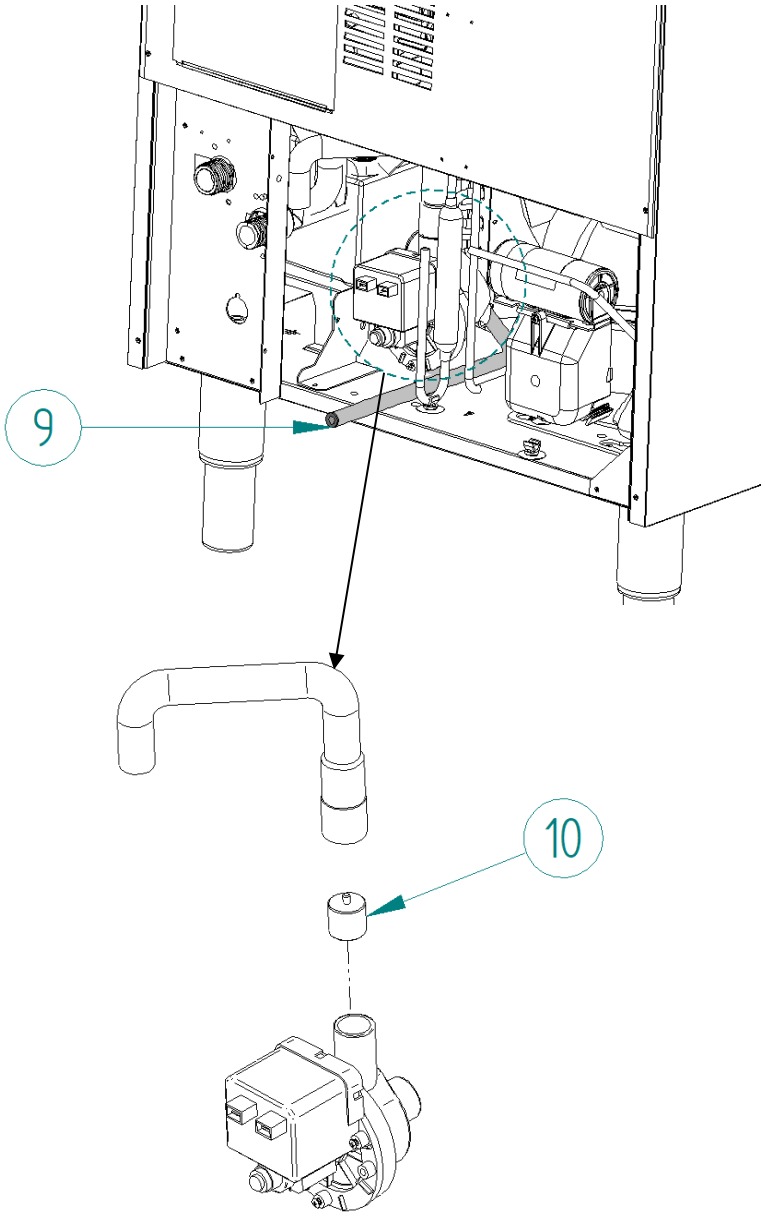
9
10

4.4.2 CONTROL BOARD

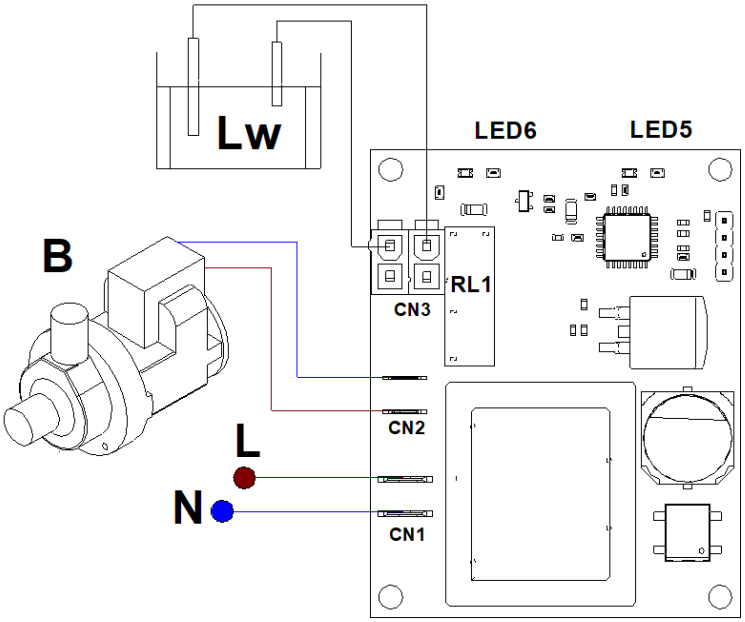

PCB connections	
Outputs	
B	Water pump
Inputs	
Lw	Water Level Sensor

LED signalling

There are two LEDs that signals machine status

Status signaling. Continuous led		
	LED5	LED6
PUMP RUNNING	X	
WATER LEVEL SENSOR ON		X

5. SEQUENCE OF OPERATION -MODULAR MODELS

Initial Start-up: The pump and the drain electro valve are energized for 30 seconds to empty the water tray preventing the scale build-up in water. Then the pump and the drain electro valve are de-energized, and the water inlet valve is energized filling the water tray until the water level sensor detects the water reaches the appropriate level. Then the freeze sequence starts, opening first during 5” the hot gas valve to equilibrate.

Freeze sequence: The compressor is energized and the water pump is energized after 30 seconds. The water inlet valve is also energized while the water pump to replenish water level and then de-energized. The compressor and water pump will continue energized until the thickness sensor detects the thickness of the ice slab is the appropriate. Then the harvest sequence starts.

Harvest sequence: The compressor will continue energized. The hot gas valve is energized throughout the harvest phase to divert hot refrigerant gas into the evaporator. The water pump and the drain electro valve are energized for 45 seconds to empty the water tray and SERVICE MANUAL remove mineral deposits. After this (water pump and drain electro valve de-energized) the water inlet valve is energized filling the water tray until the water level sensor detects water reaches the level. The ice slab slides off the evaporator and into the bin. The momentary opening and re-closing of the shield indicates the harvest sequence has finished and goes to the freeze sequence.

5.1.- INITIAL START-UP

It is carried out at machine work start in following cases (being all outputs switched off):

- when machine is connected to power supply.

- when the switch is turned to the ICE position

- after a stop due to full storage During start-up time (5”) the pump (B) and the drain valve (EP) are activated. Subsequently, B and EP are closed and the water inlet valve (EW) is opened until the level sensor (NW) indicates that the storage reservoir is filled with water. At this point, the hot gas valve opens for 5”, and then the production phase starts. LE1 on.

Please note: If at this stage the curtain (MC) is open, the indicated machine status is switched to full storage (full).

Production

Following outputs are activated:

- Compressor (C).

- Pump (B). It is activated with delay time of 30”.

- Water inlet valve (EW). It is kept active during 30”, if the water level (NW) is not reached the water valve (EW) will keep open (even after 30”) until the water level probe (NW) detects water tray full.

This phase is maintained until the thickness detection sensor gives a signal (which is maintained during 10”). At this stage, the operation launching phase starts.

*LE1 on.

Please note: during this time the opening of the curtain (MC) has no consequences.

Harvest

Outputs:

- Compressor (C). It is still in operation.

- Hot gas valve (GC). It is active during the whole operation launching time.

- Pump (B) and wast water valve (EP) are active during 20”

- Water inlet valve (EW) is activated when 20” are over (when the pump is stopped)

*LE1 on.

The harvest ends when the ice sheet falls down and the curtain micro contact (MC) is activated.

Two possibilities:

1) MC is active during a time less than 30” → when the MC signal stops, the production phase will start.

2) MC is active during a time more than 30” → machine will be stopped due to full storage (all outputs are switched off / LED LE3 continuously switched on). When the curtain (MC) is closed again, the initial start-up phase will be re-initiated.

Harvest with delay time of hot gas valve and wast water valve

When the Switch-6 is ON, in the harvest cycle the hot gas delay time (30") and the purge time (10") that replaces the previous purge time of 20" shall be taken into account during the take-off phase.

- Compressor (C). It is still in operation.

- Pump (B) and wast water valve (EP) are active during 10” instead of 20”.

- Water inlet valve (EW) is activated when 10” are over (when the pump is stopped)

- Hot gas valve (GC). It has an allotted delay time (30") in which:

• If switch 6 OFF: the GC valve is activated the instant take-off begins (when the EP bleed valve is activated);

- If switch 6 ON: the GC valve is activated after 30 seconds from the start of takeoff.

5.2.-MS CONTROL BOARD

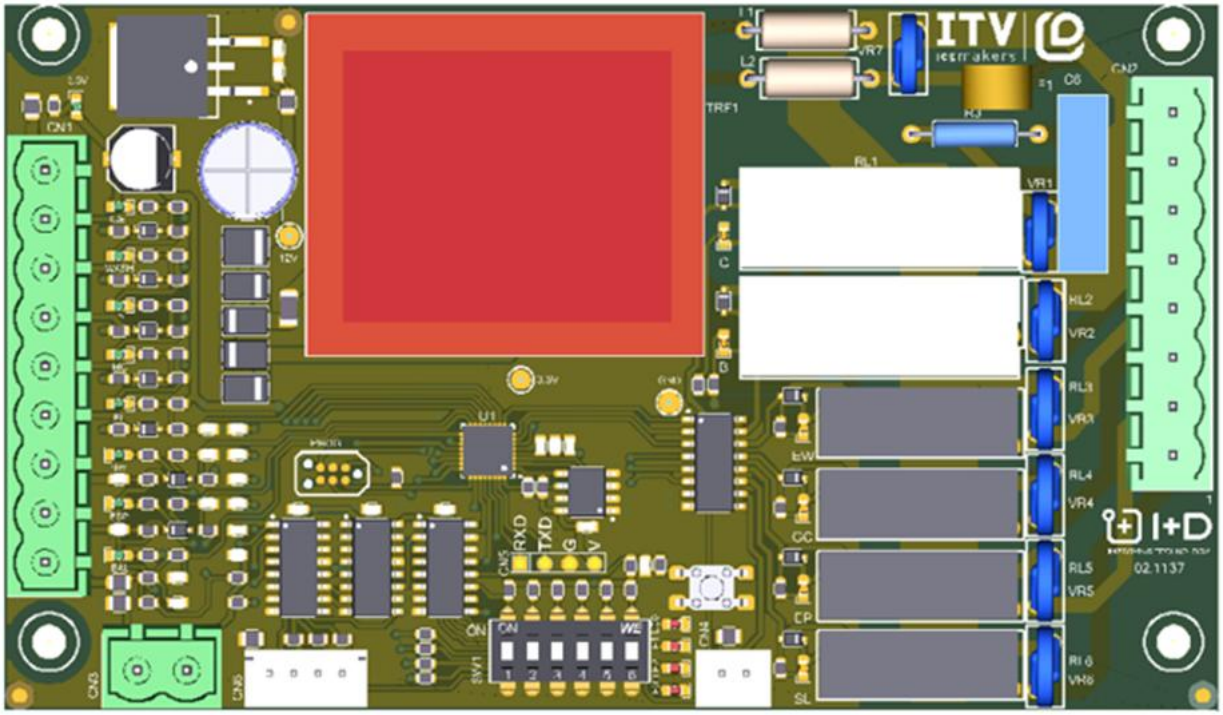

Digital outputs

Symbol	Description	Amp. relay
C	Compressor (Relay / contactor)	5
B	Pump	5
EW	Wáter inlet valve	5
GC	Hot gas valve	5
EP	Drain valve	5
SL	Free	5
Z	Buzzer (only few models)	

Inputs

Digital inputs

Symbol	Description	
ICE	Ice position switch	Switch for 3 positions Ice – 0 - wash
WASH	Wash position switch	

P	Safety pressure switch / NC contact
MC	Curtain micro relay contact NC1
MC2	Curtain micro relay contact NC2
Dip-Switch (ON/OFF)	
1	Firmware change
2	Service alarm
3	Purga cada 3 despegues
4	Water inlet valve e/w timeout
5	Free
6	Hot gas valve delay and purge time

Analogic inputs

Symbol	Description
ESP	Thickness detection sensor
NW	Water level in reservoir
EAL	NTC 10K suction temperature probe

Connectors

To facilitate the installation and improve the connection of the wiring to the board, we have incorporated connectors.

The connectors that have been installed are:

Ref.	Description	Symbol
1	CONNECTOR DINKLE 5EHDVC-09P	CN1
2	CONNECTOR DINKLE 5EHDVC-08P	CN2
3	CONNECTOR 5EHDVC-02P (for machine stacking)	CN3
4	CONNECTOR B4B-XH-A (display)	CN4
5	CONNECTOR B2B-XH-A (buzzer)	CN5
6	CONNECTOR FOR PROGRAMMATION	CN6

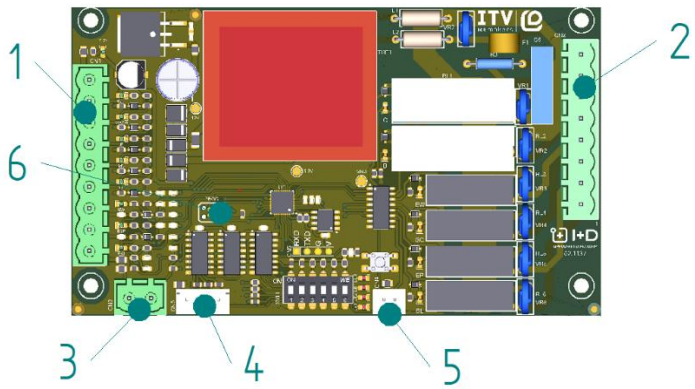

LED signalling

Internals:

Symbol	Description
LO 1-6	6 orange LEDs for each output
LI 1- 7	7 green LEDs for each input
LE 1-4	4 red LEDs for status/alarm (flashing) stand by – ice – full - wash

By each out relay there is a red led. Signals relay on

By each input terminal there is a green leed marking input active.

There are four additional leds what signals machine status (continuous) or alarm (flashing)

LED	continuous	flashing
0	Stand by	Long harvest timeout
1	Ice	Long ice cycle timeout
2	Wash	Short ice cycle timeout
3	Full bin	Water filling timeout
0-1-2-3	--	Safety pressure switch

Externals:

MS have a display with three leds on the front panel that show the status of the:

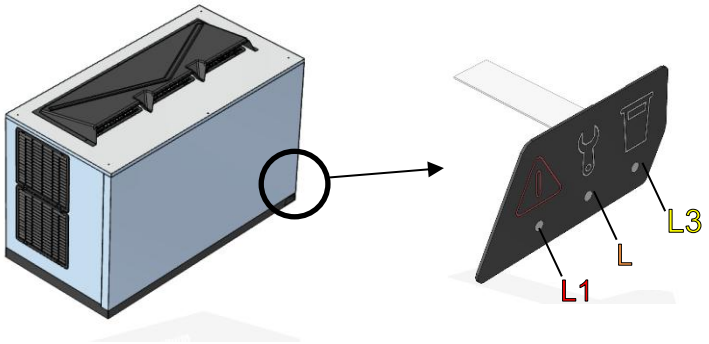

Picture	Symbol	Description	Volt (V)
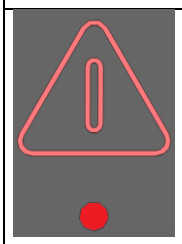	L1	Alarm led (Rojo)	3.3

	L2	Service/wash led (Naranja)	3.3
	L3	Full storage led (Amarillo)	3.3

5.3.- ALARMS

Alarms detect cases of malfunction. They are signalled with the L1 LED on the front of the machine and the alarm can be identified by the LE0-1-2-3 LEDs (in the board) and by the buzzer (only in some models).

In some alarms, a second work attempt is made and if the malfunction is repeated the machine stops. The L1 LED and buzzer are activated on the second attempt.

When the alarm stop occurs, the reset is done by disconnection.

5.4.- NOTICE LEGEND

Notice	L1	L2	L3	LE0	LE1	LE2	LE3	Buzzer
Safety pressure switch	FIX			INT	INT	INT	INT	1 and 3 beeps sequence
Harvest >3”	FIX			INT				Fixed
Ice time >60’	FIX				INT			1 beep sequence
Ice time <2’	FIX					INT		2 beeps sequence
Water inlet > 3’ (SW ON)	FIX						INT	1 and 2 beeps sequence
Water inlet > 3’ (SW OFF)	FIX				INT	INT		
Service		FIX						
Wash cycle		*						
Full storage			FIX					
Ice process				FIX				

INT = Led flashing

FIX = Led ON

“ * ” = L2 led still intermittent on all the wash process but only when it is time to put the wash product, in this time L2 still intermittent but with more velocity. Once the entire wash process end, L2 change from intermittent to ON until the change of the 3 positions switch.

5.5.- ALARM HISTORY

It is possible consulting the alarms history (only the last 3 alarms) with the LEDs in the board, LE0, LE1, LE2 and LE3.

Activation: when MS48” is power OFF, touch the button in the board and at the same time change the 3 positions switch to I. The machine still in standby and in this moment the LEDs NW, ESP and EAL are intermittent for notify that is showing the alarms history.

Signalling: releasing the button, NW led still on, it signified that is showing the last alarm occurred in the machine, LE0-LE1-LE2-LE3 show on the type of alarm. The same button change from visualise the last alarm to visualise the penultimate alarm, and it is the same, LE0-LE1-LE2-LE3 show on which type of alarm and the ESP led show on that these LEDs are referred to the second last alarm. With the same button for the third time, it is the same but with EAL led and LE0-LE1-LE2-LE3 are showing on the third last alarm occurred.

Reset of alarms: Once pressing the button of the electrical board for more than 5’ (only in the case that are showing the alarms) the alarms are resetting and are deleted all the alarms history. At the end of this process LE0 led is ON and the machine change to standby mode.

Automatic deactivation: after 10’ viewing the alarms without touch the button, the machine goes to standby mode.

*Signalling: LE0 on.

Manual deactivation: with current disconnection from the board.

The stopped for Full storage is not considered as alarm, for this, it doesn’t figure in the alarm’s history.

5.6.- SERVICE SIGNAL

This board have an internal counter that count the time of power ON of the machine. At 6 months of power ON it have two possibilities:

- If switch 2 ON: L2 led will be active at 6 months of power on.
- If switch 2 ON: L2 led doesn’t work.

For the reset of the service signal have to press for 20” the board button and change at the same time the 3 positions switch from 0 to Wash and again from Wash to 0. If L2 led blink for three times, this signify that the alarm’s history has been resettled.

5.7.- SAFETY PRESSURE

When the pressure contact (P) is open, instantly, all outputs switch over to off position.

When it is closed again the machine will stop for 3 minutes, then continue at the position where it was, except during the harvest phase, that starts with an initial start. If starts at fabrication, the hot gas valve will open during 5” before starting the compressor.

* Signalling: Flashing in the four LEDs. L1 on. Buzzer on.

5.8.- LONG HARVEST

If the operation launching time is longer than 3’ without activation of the curtains micro contact (MC and MC2), the launching is interrupted, switching over to the production cycle. If the same thing happens again at the next launching, the machine will stop.

* Signalling: Flashing in LE0. L1 ON. Buzzer ON.

5.8.-ICE PRODUCTION CYCLE TIMEOUT

If the production cycle time is more than 1 hour without receiving any thickness detector signal (ESP), the next launching phase will be started. If the same thing happens again at the next launching, the machine will stop.

* Signalling: Flashing in LE1. L1 ON. Buzzer on.

5.10.-SHORT PRODUCTION CYCLE

If during two consecutive cycles the production cycle time is less than 2 minutes, the machine will stop.

* Signalling: LE2 Flashing. L1 on. Buzzer on.

5.11.-WATER FILLING TIMEOUT

When it occurs, the water valve (EW) must be activated, the level sensor (NW) will not be active during a maximum time (3’).

Two possibilities:

- Dip-switch 4 OFF → Machine stops and when a time of 1 hour has passed it starts the unit if the switch 3 is in Ice position (I). If it is in clean position (II) the cleaning will start again. If in 3 minutes the water level probe (NW) does not detect water, the unit will stop until a reset. * Signalling: Flashing in LE3. LE1 on.

- Dip-switch 4 ON → To be used in places with low water pressure. After 3 minutes with no water detection, the unit turns off the compressor C, water pump B, hot gas valve GC and drain valve EP. The inlet water valve EW keeps on, and the water level probe (NW) keeps waiting for the water detection. When the water is detected (water tray filled), the alarm signalling will turn off (LE1+LE2 alternative blinking), and it will continue as follow:

- Initial start up with SW4 ON

  o After 3 minutes with no water detection, LE1+LE2 will flash indicating alarm.

  o Inlet water valve (EW) will keep on, and the water level probe (NW) will remain active.

  o The compressor (C), hot gas valve (GC), water pump (B), and drain purge (EP) remain off.

  o When the water is detected, fabrication will start, and the LE1+LE2 alarm will stop.

- Fabrication after a start up with SW4 ON

  o The compressor (C), hot gas valve (GC), water pump (B), and drain purge (EP) remain off.

  o Inlet water valve (EW) will keep on, and the water level probe (NW) will remain active.

  o When the water reaches its level and the water level probe (NW) detects it, LE1+LE2 will stop flashing, and the water inlet valve (EW) closes. The hot gas valve (GC) will open for 5” before the compressor, then the compressor (C) starts, and after 30” the water pump (B) starts. The drain valve (EP) will remain closed.

  o As the normal fabrication phase (SW4 OFF), during 30”, the water level will be checked with the water probe (NW), if no water is detected, the water inlet valve (EW) will remain open (even after 30”) until the water level probe (NW) detects the water.

  o If after 30” no water is detected, and 3 minutes has passed, the unit will not stop, the water inlet valve will close and the unit will keep going into fabrication mode.

  o As the normal fabrication phase (SW4 OFF), this phase will be active until the thickness sensor probe will give a signal (maintained during 10”). Then the unit will go into harvest.

*NOTE: The minimum time for the compressor to be off is 6 minutes, in case that the water is detected before this 6 minute since the compressor has turned off, the hot gas valve (GC) and the compressor (C) will not turn on again until the 6 minutes has passed by.

5.12.- MACHINE STACKING

It is possible to install two modular machines stacked one above the other with stacking kit (part number 6586).

The switchboard must have a connector permitting to connect the boards of both machines with a single cable and also a jumper with the indication:

- Closed jumper → upper machine
- Open jumper → lower machine

The lower machine works in the same way as if operating alone.

The upper machine operates normally except when the lower machine is stopped due to full storage (full), at this moment, the upper machine will also stop and pass over to the same status (full).

When the curtain of the lower machine is closed again, it re-initiates the start-up sequence, likewise the upper machine, but with a 1’ delay.

Full instructions for stacking are supplied with the kit

6 REFRIGERATION DIAGRAM

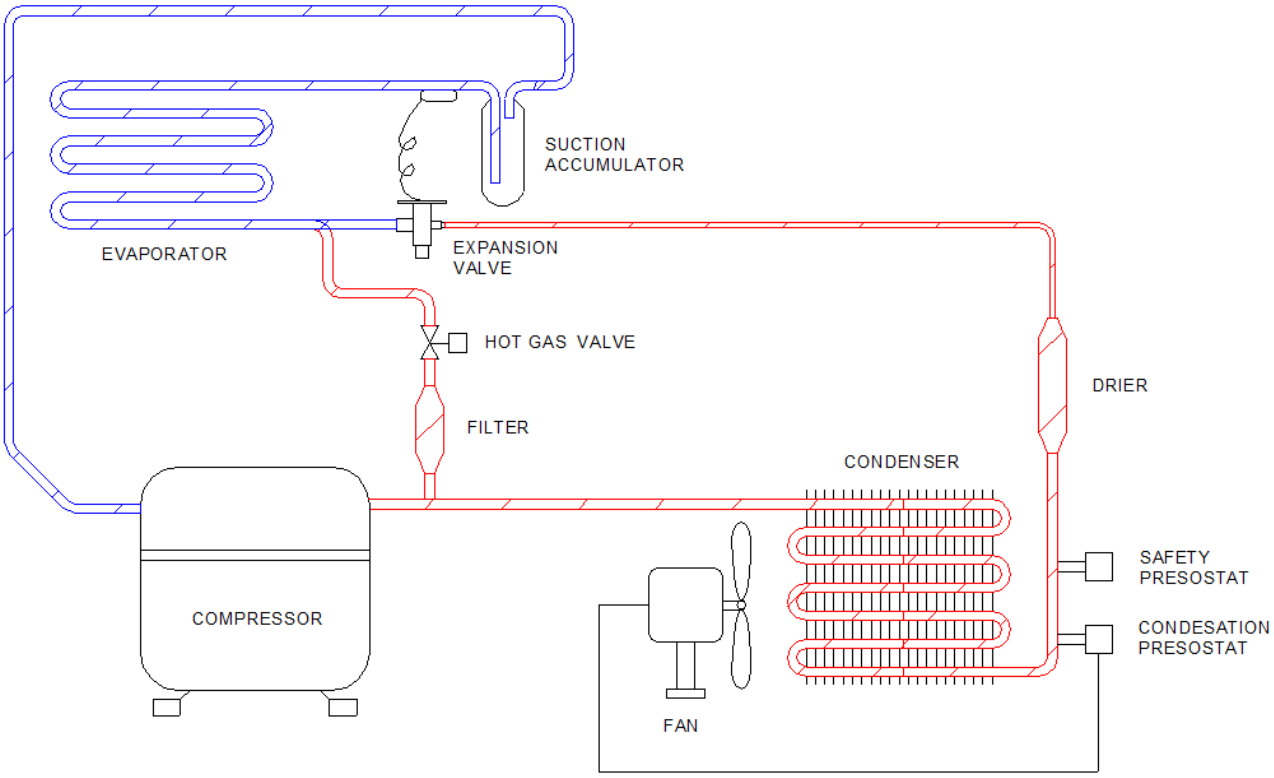

7 MAINTENANCE AND CLEANING PROCEDURES

It is the User's responsibility to keep the ice machine and ice storage bin in a sanitary condition. Ice machines also require occasional cleaning of their water systems with a specifically designed chemical. This chemical dissolves mineral build up that forms during the ice making process. Sanitize the ice storage bin as frequently as local health codes require, and every time the ice machine is cleaned and sanitized.

The ice machine's water system should be cleaned and sanitized at least twice a year.

CAUTION: Do not mix Ice Machine Cleaner and Sanitizer solutions together.

WARNING: Wear rubber gloves and safety goggles when handling Ice Machine Cleaner or Sanitizer.

WARNING: Unit should always be disconnected during maintenance/cleaning procedures.

7.1.- CLEANING WATER DISTRIBUTION SYSTEM FOR UNDER COUNTER MODELS (NG)

a) Set the switch to the OFF position after ice falls from the evaporator at the end of a harvest cycle, or set the switch to the OFF position and allow the ice to melt off the evaporator.

CAUTION: Never use anything to force ice from the evaporator.

b) Remove all ice from the bin.

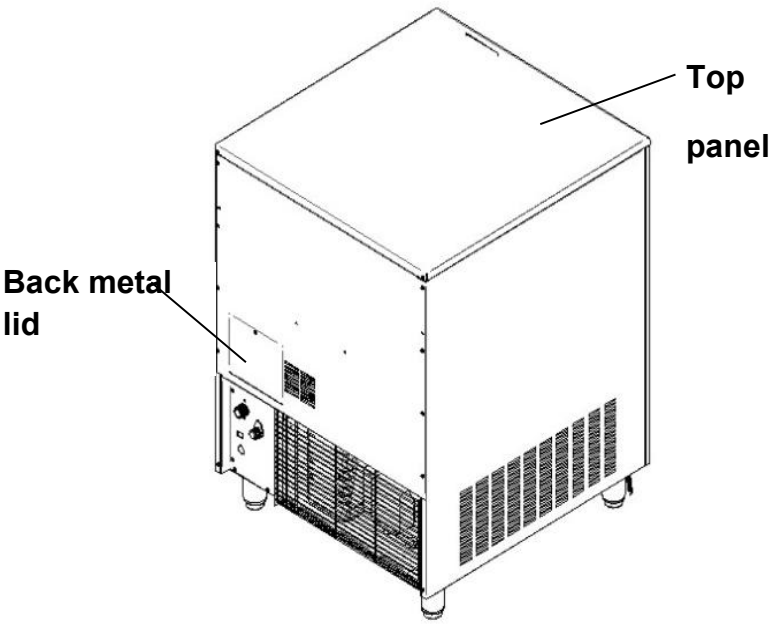

c) Remove the back metal lid and the top panel (if it need be to make easier the cleaning operations).

d) Remove the auxiliary pipe for drain operations near the pump and empty the water tray. Return it to their original position to avoid water spill.

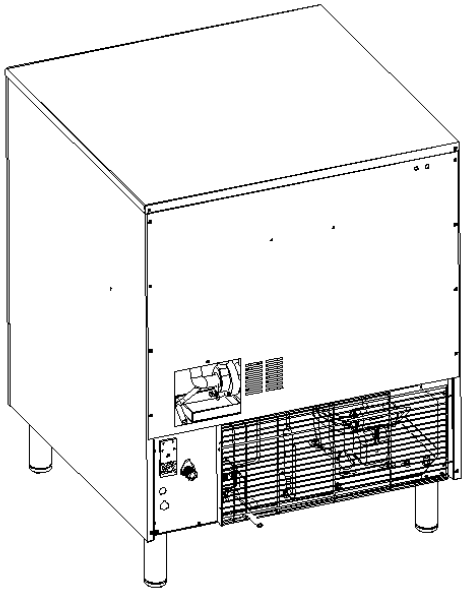

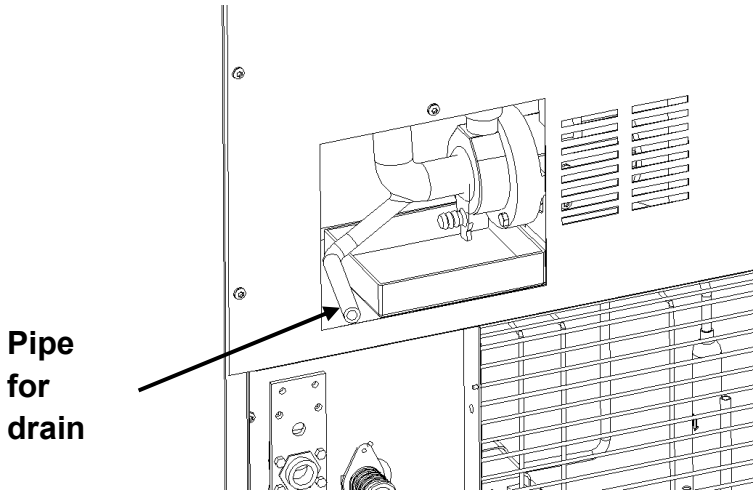

e) Prepare a solution of an appropriate product for the cleaning of ice machines (lime). Do not use hydrochloric acid. We recommend the use of any NSF approved scale removal product prepared according to the manufacturer's instructions.

f) Fill water tray with the solution

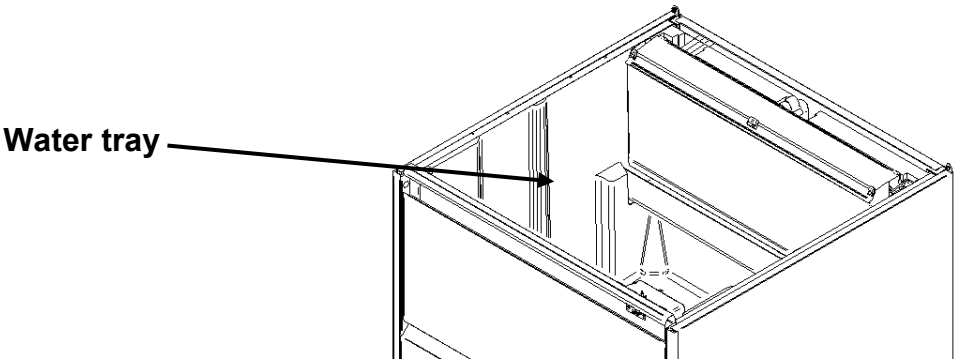

g) Disconnect power. Turn on the machine pushing SW3 (see picture). Let solution stand for 30-40 minutes and then switch off the machine. Disconnect power

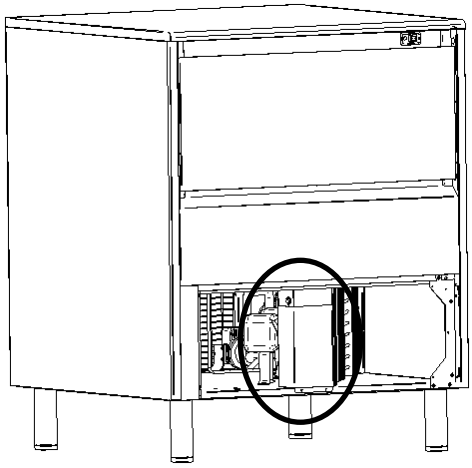

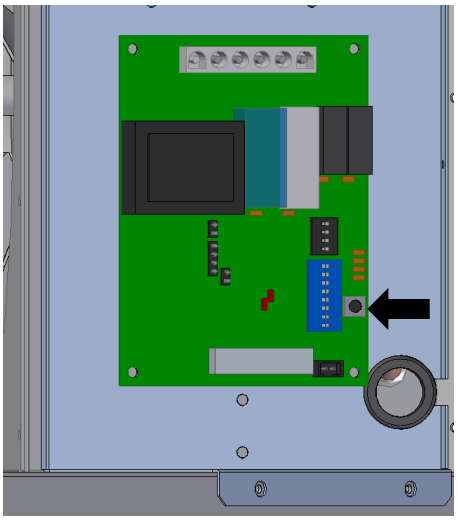

h) Disconnect power.

i) Remove the auxiliary pipe to drain and purge out the ice machine scale remover and residue. Replace it.

j) Mix enough cleaning solution (as in point **e**) to clean parts and interior food zone surfaces.

k) Remove curtain.

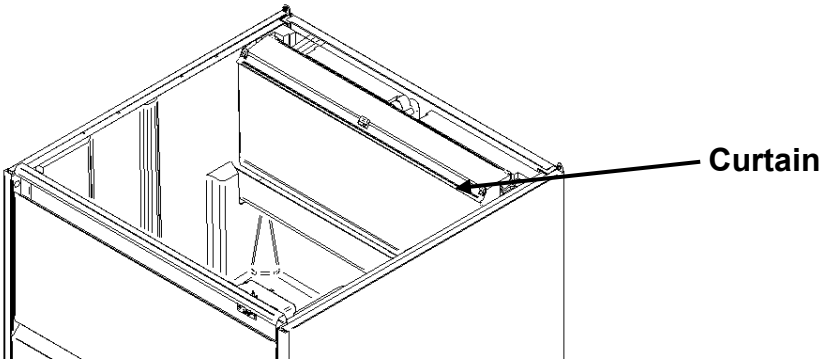

l) Clean all surfaces of the shield with the cleaner solution using a brush (not a wire brush) or cloth. Rinse all areas with water.

m) Clean all the interior surfaces of the freezing compartment (including storage bin) with the cleaner solution using a brush or cloth. Rinse all areas with water.

n) Mix a solution of sanitizer using approved (EPA/FDA) sodium hypochlorite food equipment sanitizer to form a solution with 100 - 200 ppm free chlorine yield. Below an example to calculate the proper quantity of sanitizer to add to the water, for a household bleach 12,5%:

$$\text{bleach to add} \Rightarrow \frac{15}{\%\text{dis}} = \frac{15}{12.5} = 1.2\,\text{gr/L} \rightarrow *0.133 = 0.16\,\text{oz/gal}$$

o) Sanitize all surfaces of the shield applying liberally the sanitizer solution using a cloth or sponge.

p) Sanitize all the interior surfaces of the freezing compartment (including the storage bin) applying liberally sanitizer solution, using a cloth or sponge.

q) Return shield to its position.

r) Connect power and water supplies.

s) Fill water reservoir with the sanitizer solution.

t) Switch on machine in order to run water pump. Let solution stand for 20 minutes and switch off.

u) Remove the auxiliary pipe to drain and purge out the sanitizer solution and residue. Replace it. Fill the water reservoir with water and switch on the machine to allow water to circulate for 5 minutes and then stop the machine. Repeat this operation two more times to rinse thoroughly.

v) Remove the auxiliary hose to drain the water. Replace it and fill the tray with water to ensure the pump works properly.

w) Switch on compressor switch (I position)

x) Return the back metal lid and the top panel to their position.

y) Switch on machine and discard the first two harvests.

7.2.- CLEANING WATER DISTRIBUTION SYSTEM FOR MODULAR MODELS

WARNING: Wear rubber gloves and safety goggles when handling Ice Machine Cleaner or Sanitizer.

1) Remove the front panel.

2) Set Ice-wash switch to the OFF position (0 position) after ice falls from the evaporator at the end of a harvest cycle or set the ice-wash switch to the OFF position and allow the ice to melt off the evaporator.

CAUTION: Never use anything to force ice from the evaporator. Damage may result.

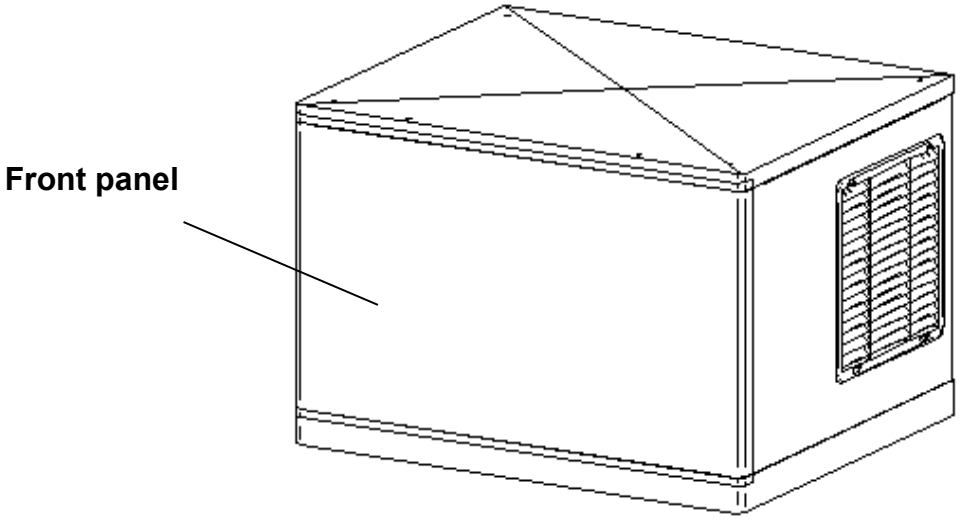

3) Prepare a solution of an appropriate product for the cleaning of ice machines (lime). Do not use hydrochloric acid. We recommend the use of any NSF approved scale removal product. Mix a solution of sanitizer using approved sodium hypochlorite food equipment sanitizer to form a solution with 100 to 200 ppm free chlorine yield. Below an example to calculate the proper quantity of sanitizer to add to the water, for household bleach 12.5%:

Bleach to add → 15/(%dis) = 15/12.5 = 1.2gr/l → *0.133= 0.16 oz/gal

We recommend preparing a previous solution. For the wash of the MS48” we recommend use 2.6 gal of product.

4) To start a cleaning cycle, move the ice-wash switch to the position II. The L2 led will flash and the machine will drain the reservoir and refill it. Pour the scale remover solution into the reserve.

MS 220

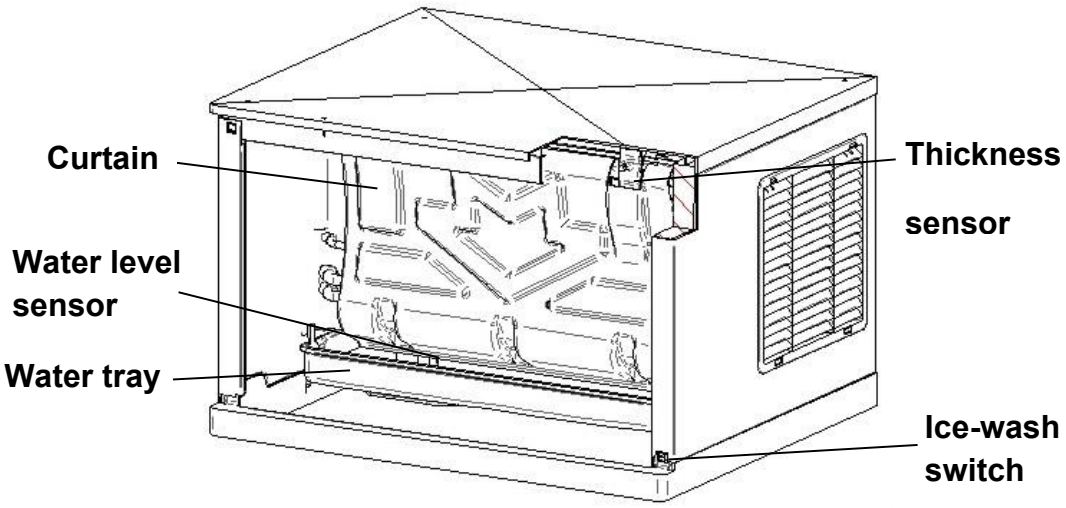

MS 400- 22

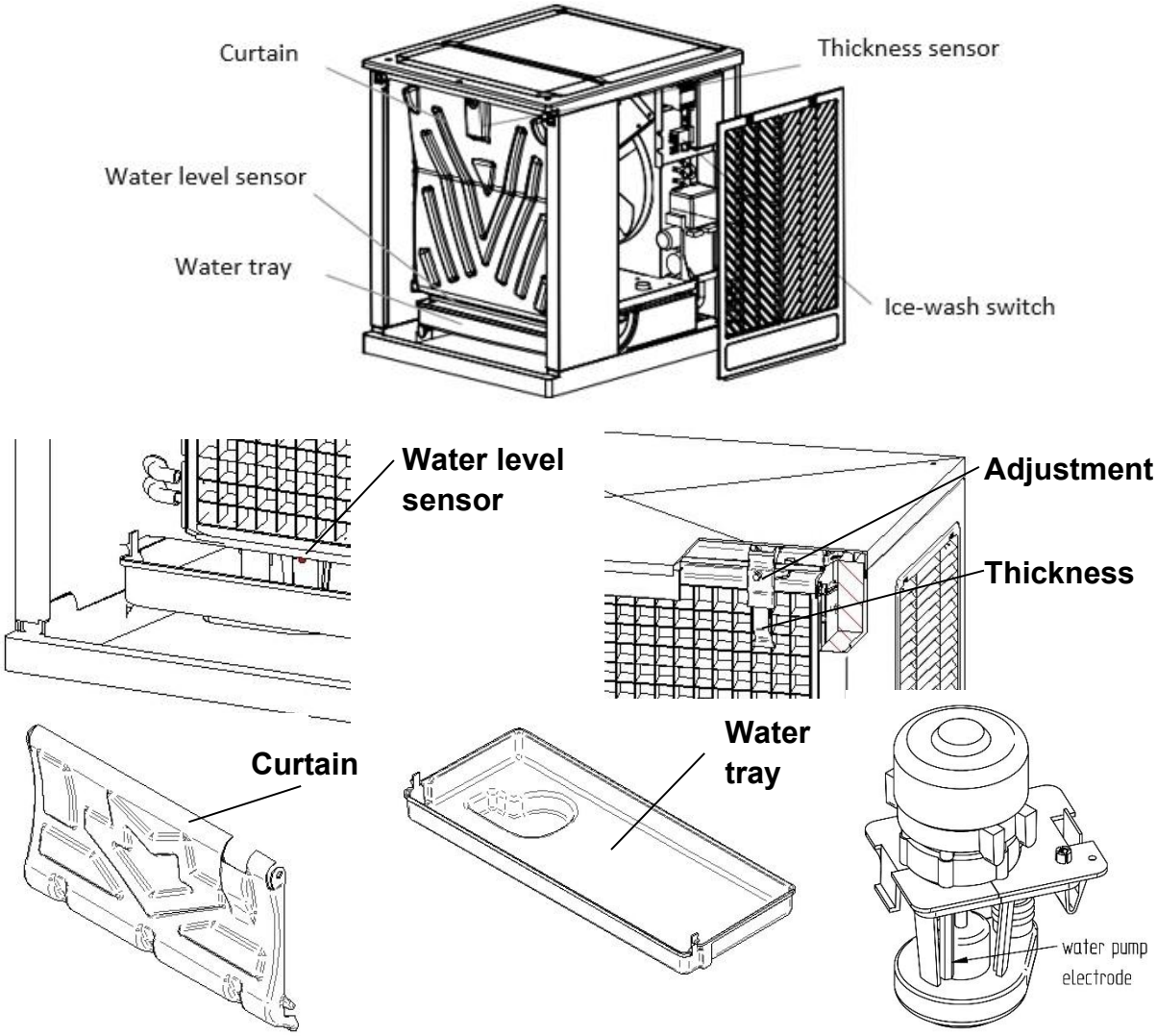

5) The technician only has to put the product in the water tray in the correct moment. Once moved the switch to II positions the machine will start to drain the reservoir and still to drain for 90”.

**L2 intermittent.*

6) After this part of process, the L2 led will be intermittent but with more velocity, in this moment we have 5 minutes to put the product in the water tray. The technician has to put the product into the water bin and wait the end of the wash cycle. From this point the process is completely automatic.

**L2 fast intermittent.*

7) After these 5 minutes the product start to circulate in the machine for 30 minutes and then it makes 3 rinses cycles for washing the machine form the product.

**L2 intermittent.*

8) Once ended this process, L2 led turn on fixed, the wash cycle it is over. In this moment it is possible to change the switch to I position and so starts with ice production.

**L2 fixed.*

Please note

In wash cycle, in case of:

- The current goes out;
- The switch change to 0 or I position;
- Sock disconnection;

MS 48" starts with a 3 rinses cycle. So, if the machine doesn't end the wash cycle can't start to produce ice, it after do a 3 rinses cycle. During 3 rinses process → L2 intermittent.

7.3.- CLEANING THE BINS (FOR UNDERCOUNTER MODELS)

1) Disconnect the machine, close water faucet and empty storage bin of ice
2) Use the cleaner/water solution to clean all surfaces of the bin. Use a nylon brush or cloth. Then rinse all areas thoroughly with clean water.
3) Use the sanitizer/water solution to sanitize all surfaces of the bin. Use a nylon brush or cloth.
4) Rinse with plenty of water, dry, run the machine and open water faucet.

7.4.- CLEANING THE CONDENSER

AIR CONDENSER

1) Disconnect machine and close water faucet.

2) For undercounter models remove the front grid by pressing the two clips placed at right side (see figure). For modular models remove the filter panel (see figure).

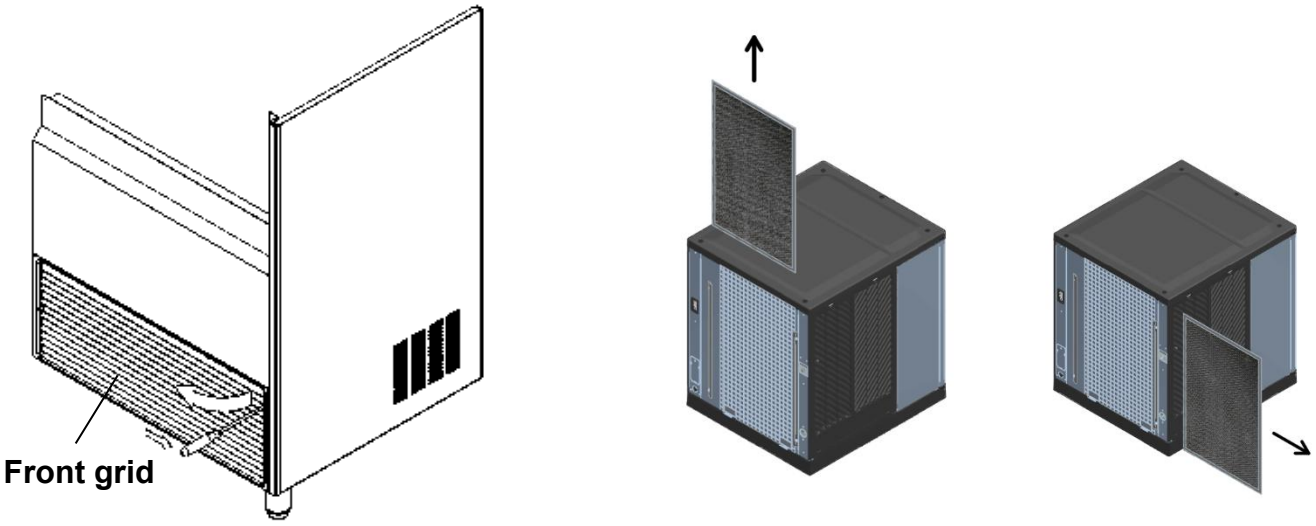

3) Clean condenser using a vacuum cleaner, soft brush or low pressure air. Clean from top to bottom, not side to side. Be careful not to bend the condenser fins.

WATER CONDENSER

The water condenser may require cleaning due to scale build-up. The cleaning procedures require special pumps and cleaning solutions. They must be performed by qualified maintenance or service personnel.

7.5.- EXTERNAL CLEANING OF THE MACHINE

Clean the area around the ice machine as often as necessary to maintain cleanliness. Sponge any dust and dirt off the outside of the ice machine with mild soap and water. Wipe dry with a clean soft cloth. A commercial grade stainless steel cleaner/polish can be used as necessary.

7.6.- WATER LEAKAGE CHECKING

This must be done whenever maintenance is carried out on the machine: check all water connexions, braces, tubes and hoses in order to eliminate leaks and prevent breakages and flooding.

8 TECHNICAL SPECIFICATIONS

- **UNDER COUNTER**

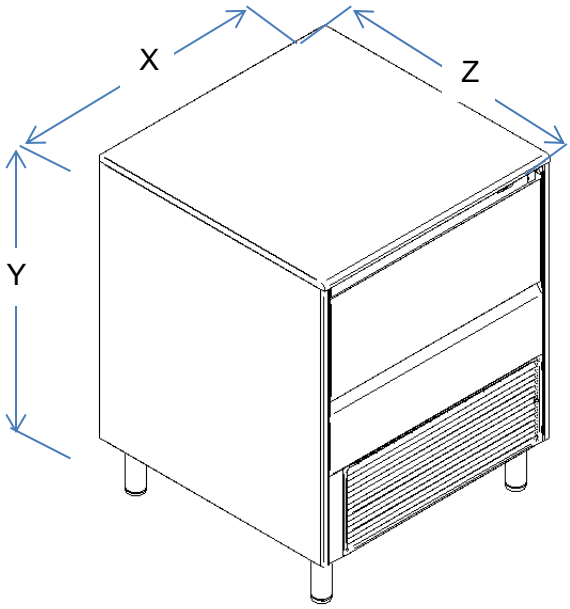

- **MODULAR**

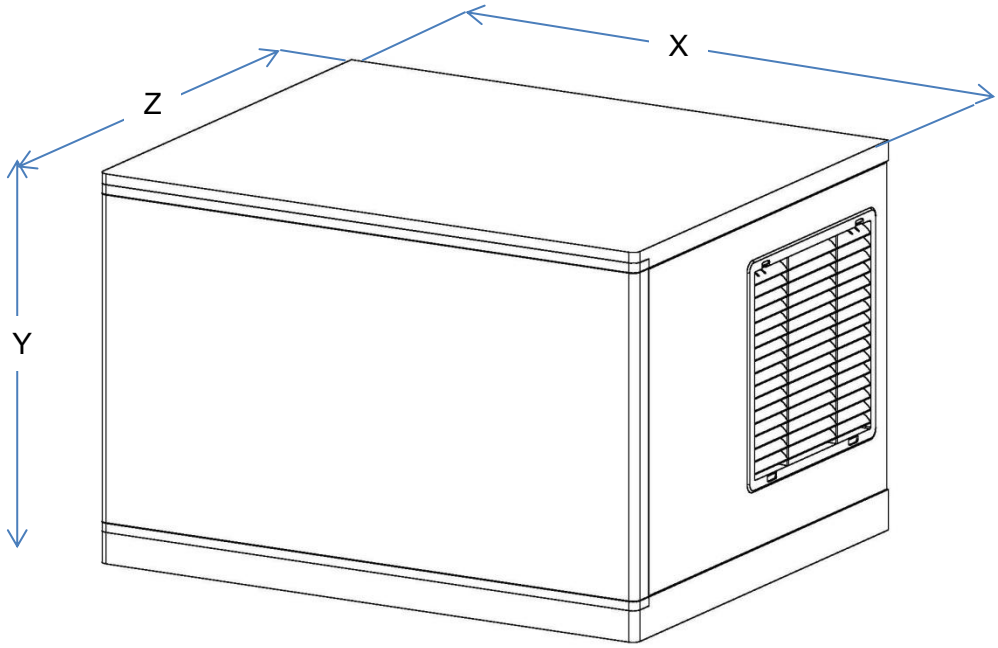

8.1.- DIMENSIONS

UNDERCOUNTER-MODULAR							
MODELS	COOLING	MACHINE DIMENSIONS			PAKAGING DIMENSIONS		
		mm			mm		
		WIDTH X	DEPTH Z	HEIGHT Y	WIDTH X	DEPTH Z	HEIGHT Y
NG 50	Air	**536**	**594**	**795**	**620**	**660**	**919,5**
NG 70	Air	**536**	**594**	**795**	**620**	**660**	**919,5**
NG 100	Air	**660**	**701**	**838**	**744**	**769,5**	**970**
NG 150	Air	**762**	**762**	**838**	**835,5**	**835,5**	**970**
MODULAR 220	Air	**762**	**620**	**500**	**835,5**	**635**	**625**
MODULAR 400-22	Air	**559**	**620**	**658**	**650**	**708,5**	**820,5**

9 USER TROUBLESHOOTING GUIDE

9.1.- UNDERCOUNTER MODELS

PROBLEM	PROBABLE CAUSE	SOLUTION
None of the electrical parts work. Front switch on but pilot is off	The machine is unplugged.	Plug in the machine and verify socket power
Front pilot on but none is working	Curtain not proplyl closed	Check curtain free movement and closed position
	PCB alarm	Switch unit off-on. If continues see PCB alarms diagnosis in this table
No water in tray	Not incoming water	Check water supply
	Inlet strain at water valve blocked	Check and clean
	Not enough water time	Increase water time. dip 5-7 (table xx)
Ice slab empty or too thick	Desadjusted cycle time	Adjust cycle timer dip 1-4 (table xx)
	Desajusted cycle cut temperature Tc	Adjust dip 8 (ver punto xx)
	TXV bulb faulty contact	check
Difficult to release ice slab at harvest	Unit bad leveled (tilted to back)	Level; down front
	Dirty or scaled evaporator	Perform descaling procedure
	Not enough water time	Increase water time. dip 5-7 (table xx)
Not uniform flow pattern at evaporator	Dirty or scaled distributor	Perform descaling procedure. Remove and clean distributor (pull from two clips at distributor sides)
PCB alarms. See point 4.2		
High pressure switch	Dirty condenser	Clean condenser
	Defective fan	Check. Replace
	Defective pressure switch	Check. Replace
NTC probe error	Defective probe	Check. Replace
	Defective probe plug connection	Check
Ice cycle timeout	No frozen evaporator	Check compressor and refrigeration system
	NTC probe faulty contact	Check probe fitting and insulation
Harvest cycle timeout	Ice slab not released	Faulty hot gas valve Bad leveled unit. check water time too short. Increase
	No ice on evaporator	No water in tray. - check water supply - check water valve and strainer - check water leaks Faulty pump. Verify
	Faulty curtain sensor	Check sensor and wiring
For further problems call aftersales service		

9.2.- MODULAR MODELS

PROBLEM	PROBABLE CAUSE	SOLUTION
None of the electrical parts work.	The machine is unplugged.	Plug in the machine and verify socket power
	Rear switch OFF	Switch ON
	Front switch position 0	Move to ICE (behind front panel)
All the electrical parts work but not compressor. (water doesn´t freeze)	Front switch position WASH.	Move to ICE (behind front panel)
No water in tray	Not incoming water	Check water supply
	Inlet strain at water valve blocked	Check and clean
Not enoug water to end cycle	Water level probe too low	Move up (steel rod beside pump)
	Defective drain valve (check drain leak during ice stage)	Disassemble and clean
	Shield splash leaks	Check shield position
Water overflows tray	Level probe too high or scaled	Adjust / clean
Ice slab empty or too thick	Desadjusted/scaled thickness probe	Adjust / clean
Difficult to release ice slab at harvest	Unit bad leveled (tilted to back)	Level; down front
Not uniform flow pattern at evaporator	Dirty or scaled distributor	Perform descaling procedure. Remove and clean distributor (pull from two clips at distributor sides)
Low production	Dirty condenser	Clean (check also incoming water/air temperature)
Unit stops after few time running	Safety pressure switch opens	Clean air condenser (back)
Switch in I position but the machine still working as wash cycle.	The wash cycle is not over.	Wait for the rinses to run out and then the machine wil start his normal work.
For further problems call aftersales service		