TECHNICAL MANUAL

Palette (R290)

ICE CUBE MAKERS

MODELS:

Q 20
Q 30
Q 40
Q 50
Q 60
Q 90
Q 130

CAREFULLY READ THE INSTRUCTIONS CONTAINED IN THIS MANUAL SINCE THEY PROVIDE IMPORTANT INFORMATION RELATIVE TO SAFETY DURING INSTALLATION, USE AND MAINTENANCE.

INDEX

1. INTRODUCTION 3
1.1.- Warning 3
1.2.-Reception of the machine 6
2. INSTALLATION 7
2.1.- Placing of the ice maker 7
2.2.-Levelling of the ice maker 8
2.3.-Minimum distance to obstacles 9
2.4.- Water supply connection 10
2.5.-Drain connection 11
2.6.- Electrical connection 11
3. PRIOR CHECKING AND START-UP 12
3.1.- Prior checking 12
3.2.- Start-Up 12
4. SEQUENCE OF OPERATION 14
4.1. Control Board 16
4.2.- Alarms 17
4.2.1 Safety high pressure switch 17
4.2.2 WATER INLET TIMEOUT 18
4.2.3 Producion time timeout 18
4.3 FRONT push button function (LONG STOP DRAIN) 18
5 Refrigeration diagram 19
6 MAINTENANCE AND CLEANING PROCEDURES 20
6.1.- Cleaning water tray 20
6.2.- Cleaning the bins 21
6.3.- Cleaning the condenser 21
6.4.- External cleaning of the machine 22
6.5.- Water leakage checking 23
6.6.- MAINTENANCE TABLE 23
7 USER TROUBLESHOOTING GUIDE 25
8 TECHNICAL DATA ..... **¡Error! Marcador no definido.**

1. INTRODUCTION

Thank you for purchasing a ‘NGQ’ Ice Cube Maker by The Company. You have purchased one of the most reliable ice-making products on the market today.

Carefully read the instructions contained in this manual since they provide important information relative to safety during installation, use, and maintenance.

1.1.- WARNING

This appliance is intended to be used in professional and similar applications.

The installation of this equipment should be done by the Technical Assistance Service department.

The socket should always be placed on an accessible location.

When positioning the appliance, ensure the supply cord is not trapped or damaged.

Do not locate multiple portable socket-outlets or portable power supplies at the rear of the appliance.

ALWAYS disconnect the power supply from the machine BEFORE any cleaning or maintenance service.

Any change needed on the electrical installation for the appropriate connection of the machine, should be exclusively performed by qualified and certified professional personnel only.

Any use by the ice maker not intended to produce ice, using drinking water, is considered inappropriate.

It is extremely dangerous to modify or to intend to modify this machine, and will void warranty.

This appliance is not intended for used by persons (including children) with reduced physical, sensory or mental capabilities, or lack of experience and knowledge, unless they have been given supervision or instruction concerning use of the appliance by a person responsible for their safety.

Children being supervised not to play with the appliance.

Risk of child entrapment. Before you throw away your old refrigerator or freezer take off the doors.

This machine is not intended to be used outdoors nor exposed to the rain.

Connect to potable water supply only. To see “Installation” chapter.

The machine should be connected using the power cable supplied with the equipment.

IT IS MANDATORY TO GROUND THE EQUIPMENT. To avoid possible electric shock on individuals or damages to the equipment, the machine should be grounded pursuant local and/or national regulations.

THE MANUFACTURER SHALL BE HELD HARMLESS IN CASE OF DAMAGES ARISING DUE TO THE LACK OF THE GROUND INSTALLATION. To see “Installation” chapter.

In order to assure the proper operation and efficiency of this equipment, it is extremely important to follow the recommendations of the manufacturer, SPECIALLY THOSE RELATED TO CLEANING AND MAINTENANCE OPERATIONS, which should be performed mostly by qualified personnel only.

CAUTION:

Do not try to perform repairs. The intervention of non-qualified personnel, besides of being dangerous, could result in serious malfunctioning. In case of damages, contact your distributor. We recommend always using original replacement and spare parts.

Perform all discharge and recovery of materials or waste according the national regulations in force.

The Company reserves the right to make changes in specifications and design without prior notice.

This signal indicates “Risk of fire / Flammable materials” because of the use of flammable refrigerant.

For compression-type appliances that use flammable refrigerants should additionally consider the substance of the warnings listed below:

- Keep ventilation openings, in the appliance enclosure or in the built-in structure, clear of obstruction.
- Do not use mechanical devices or other means to accelerate the defrosting process, other than those recommended by the manufacturer.
- Do not damage the refrigerant circuit.
- Do not use electrical appliances inside the food storage compartments of the appliance, unless they are of the type recommended by the manufacturer.
- Do not store explosive substances such as aerosol cans with a flammable propellant in this appliance.

In case of a flammable refrigerant leakage:

- Do not generate flames close to the appliance.
- Do not switch on/off or plug in/off the appliance.
- To ventilate immediately the area where appliance is located by opening doors and/or windows.
- To call to an authorized technical service.

Disposal of the ice maker: The Company encourages to follow the regulations of each country regarding eco-friendly disposal of electric and electronic devices such this one. User who is wanting to dispose of this equipment must contact the manufacturer and follow the method to appropriate differentiated collection for the subsequent treatments.

1.2.-RECEPTION OF THE MACHINE

Inspect the outside packing. In case of damages, MAKE THE CORRESPONDING CLAIM TO THE CARRIER. To confirm the existence of damages, UNPACK THE MACHINE IN THE PRESENCE

OF THE CARRIER and state any damage on the equipment on the reception document, or on a separate instrument. As from May 1, 1998, we comply with the European regulations on management of packing and packing waste, inserting the “Green Dot Label” on all our packages.

Always state the machine number and model. This number is printed on three locations:

(1) Packing: On the outside, it contains a label with the serial number.

(2) Exterior of the unit: On the back panel of the unit, there is a label with the same characteristics as the previous one.

(3) Nameplate: On the back of the machine.

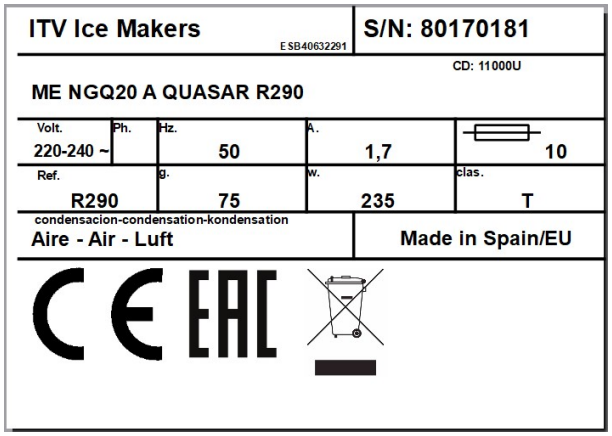

Check that in interior of the machine the installation kit is complete and comprises:

- Ice scoop
- Water hose
- 4 Legs
- 1 filter
- User manual.

- Warranty and serial number

CAUTION: All packing elements (plastic bags, carton boxes and wood pallets) should be kept outside the reach of children, as they are a source of potential hazard.

2. INSTALLATION

2.1.- PLACING OF THE ICE MAKER

This ice maker is not designed for outdoor operation. The icemaker should not be located next to ovens, grills or other high heat producing equipment. An incorrect installation of the equipment may cause damages to individuals, animals or other materials, being the manufacturer not responsible for such damages.

The Finger Ice machines are designed to operate at room temperature between 5ºC and 43ºC. There may be some difficulties in ice cube removal under the minimum temperatures. Above the maximum temperature, the life of the compressor is shortened and the production is substantially lower.

The air flow in air-condensed machines enters through the front grille, entering on the right front and exiting on the left front side. In addition, the unit is equipped with a rear air vent. Do not obstruct the front grille with any objects.

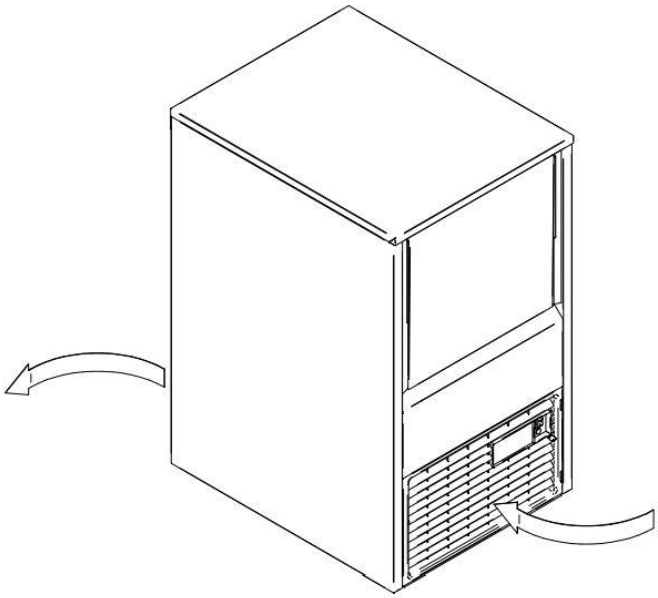

In case the front louver is not enough, the exit is either total or partially obstructed or due to its placement it will receive hot air from another device, we recommend, in case it is not possible to change the location of the machine, TO INSTALL A WATER CONDENSER.

IT IS IMPORTANT THAT THE WATER PIPING DO NOT PASS BY OR NEAR SOURCES OF HEAT SO AS NOT TO LOSE ICE PRODUCTION.

The location must allow enough clearance for water, drain and electrical connections in the rear of the ice machine. It is important that the water inlet piping does not pass near sources of heat so as not to lose ice production.

2.2.-LEVELLING OF THE ICE MAKER

Use a level on top of ice machine in order to ensure the equipment is perfectly leveled.

Screw the leveling legs onto the bottom of the ice machine as far as possible.

Move the machine into its final position.

Use a level on top of the ice machine. Adjust each leg as necessary to level the ice machine from front to back and side to side.

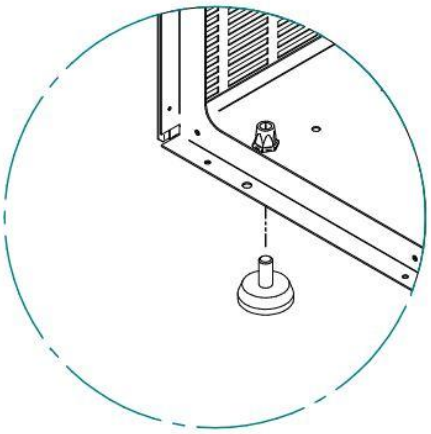

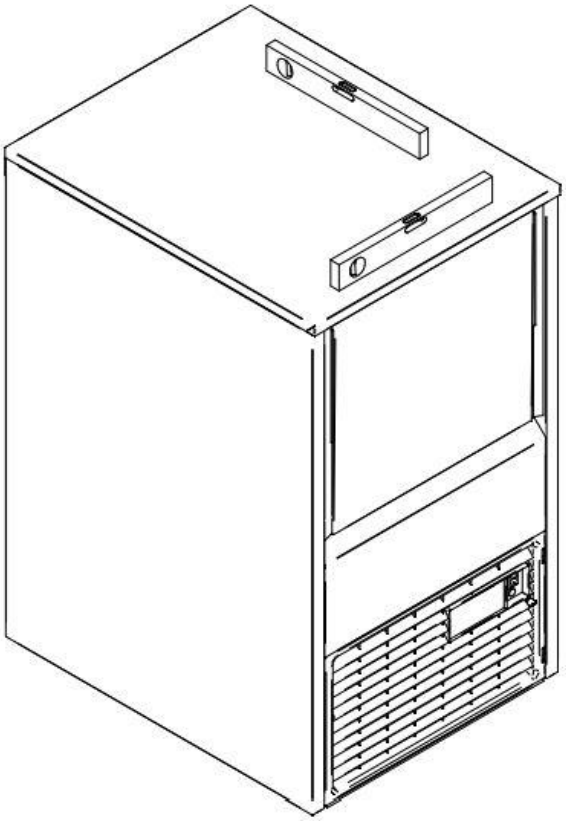

2.3.-MINIMUM DISTANCE TO OBSTACLES

Please see below the recommended minimum distances for proper operation and efficient service.

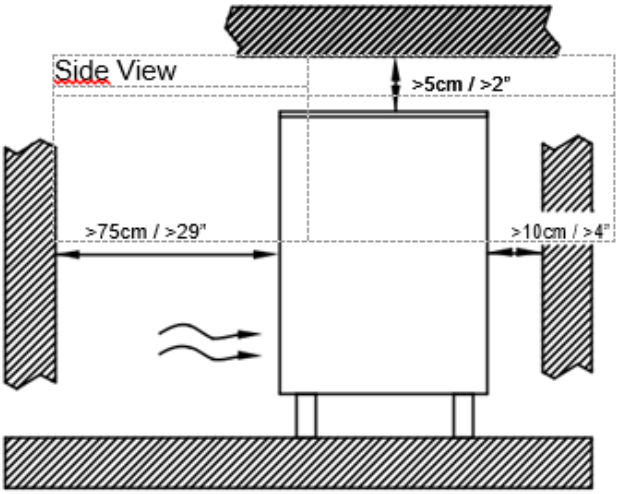

CONNECTION DIAGRAM:

The location must allow enough clearance for water drain and electrical connections in the rear of the ice machine.

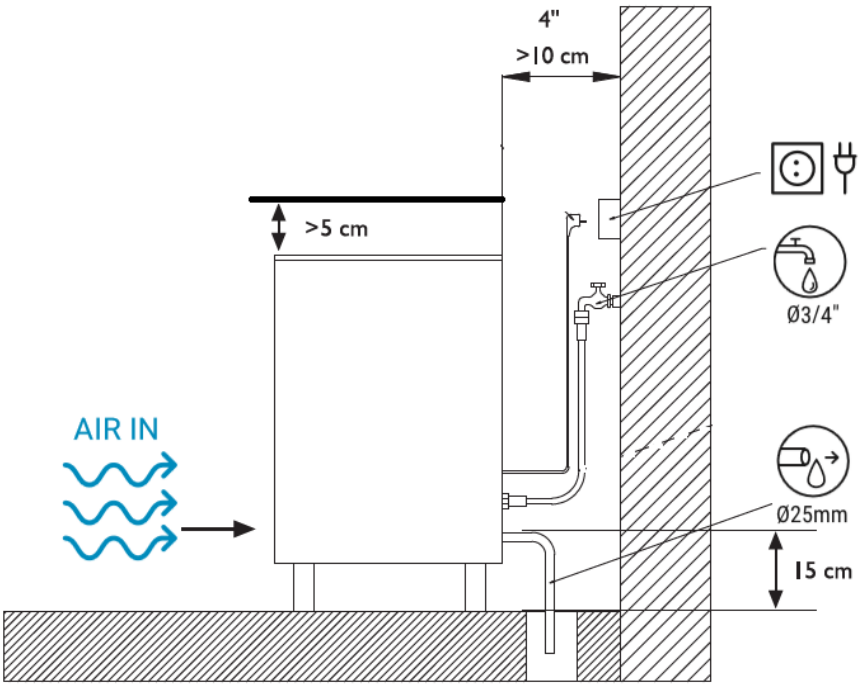

2.4.- WATER SUPPLY CONNECTION

The quality of the water supplied to the ice machine will have an impact on the time between cleanings and ultimately on the life of the product (mainly in water cooled units). It also will have a remarkable influence on the appearance, hardness and flavor of the ice.

Local water conditions may require treatment of the water to inhibit scale formation, improve taste and clarity. If you are installing a water filter system, refer to the installation instructions supplied with the filter system.

Pressure should be between 0.1MPa and 0.6MPa (1 and 6 bar). If pressure overpasses such values, install a pressure regulator.

The water connection needs to be dedicated (only piece of equipment hooked to the water line). Water line from the water valve to the ice machine needs to be ¼” nominal ID tubing.

ATTENTION: The machine shall be plumbed (with adequate backflow protection) according to applicable Federal State and local regulations.

2.5.-DRAIN CONNECTION

Drainage should be located lower to the machine level, at 150mm minimum.

It is convenient that the drain hose is 1,18” (30mm) inside diameter and with a minimum gradient of 3cm/meter, see figure.

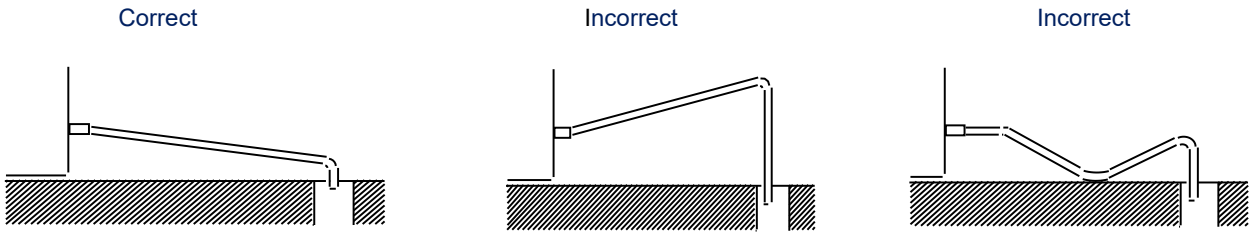

2.6.- ELECTRICAL CONNECTION

It is mandatory to ground the equipment. To avoid possible electric shock on individuals or damages to the equipment, the machine should be grounded pursuant local and/or national regulations as the case may be.

The manufacturer shall be held harmless in case of damages arising due to the lack of the ground installation.

In case the supply cable is damaged, it should be replaced by a cable of special assembly to be furnished by the manufacturer or after-sales service. Such replacement should be performed by qualified technical service only.

The machine should be places in such a way as to allow a minimum space between the back and the wall to allow an easy access and without risks to the cable plug.

Safeguard the socket. It is convenient to install adequate switches and fuses.

ATTENTION: The appliance requires an independent power supply of proper capacity. See the nameplate for electrical specifications. Failure to use an independent power supply of proper capacity can result in a tripped breaker, blown fuse, damage to existing wiring, or component failure. This could lead to heat generation or fire.

Voltage is indicated in the nameplate and on the technical specifications section of this manual. Variation on voltage above the 10% stated on the nameplate could result on damages or prevent the machine start-up.

3. PRIOR CHECKING AND START-UP

3.1.- PRIOR CHECKING

a) Is the machine leveled?

b) Voltage and frequency are the same as those on the nameplate?

c) Are the drains connected and operating?

d) Will the ambient temperature and water temperature remain in the following range?

	ROOM	WATER
MAXIMUM	43ºC	30ºC
MINIMUM	5ºC	5ºC

e) Is water pressure appropriate?

MINIMUM	0.1MPa (1 bar)
MAXIMUM	0.6 MPa (6 bar)

In case inlet water pressure is higher than 0.6 MPa, install a pressure regulator.

3.2.- START-UP

Once the installation instructions are followed (ventilation, site conditions, temperatures, water quality, etc.), proceed as follows:

1.- Open the water inlet. Verify the no existence of leakages.

4.- Connect the machine to the power supply.

5.- Turn the switch on the machine front side.

6.- Water tray will tilt down and up and start the ice cycle.

7.- Verify that there are no vibrations or frictions on the elements.

8.- Verify the ice cubs size, If necessary, adjust water level as described forward.

Damages due to the lack of maintenance and cleaning operations are not included on the warranty.

4. SEQUENCE OF OPERATION

Once you connect the machine, the Pan cam motor (#3) starts in order to evacuate all the water that is in the water tray (#6). If there is no water, it starts equally until it arrives to the lowest point and it goes to the original position, which is detected by the Pan cam Micro-Switch (#4). In that moment, the Pan cam motor stops and starts the compressor, the paddle motor (#2) making the paddles (#7) spin and also the water inlet valve (until the water level sensor (#5) detects there is enough water).

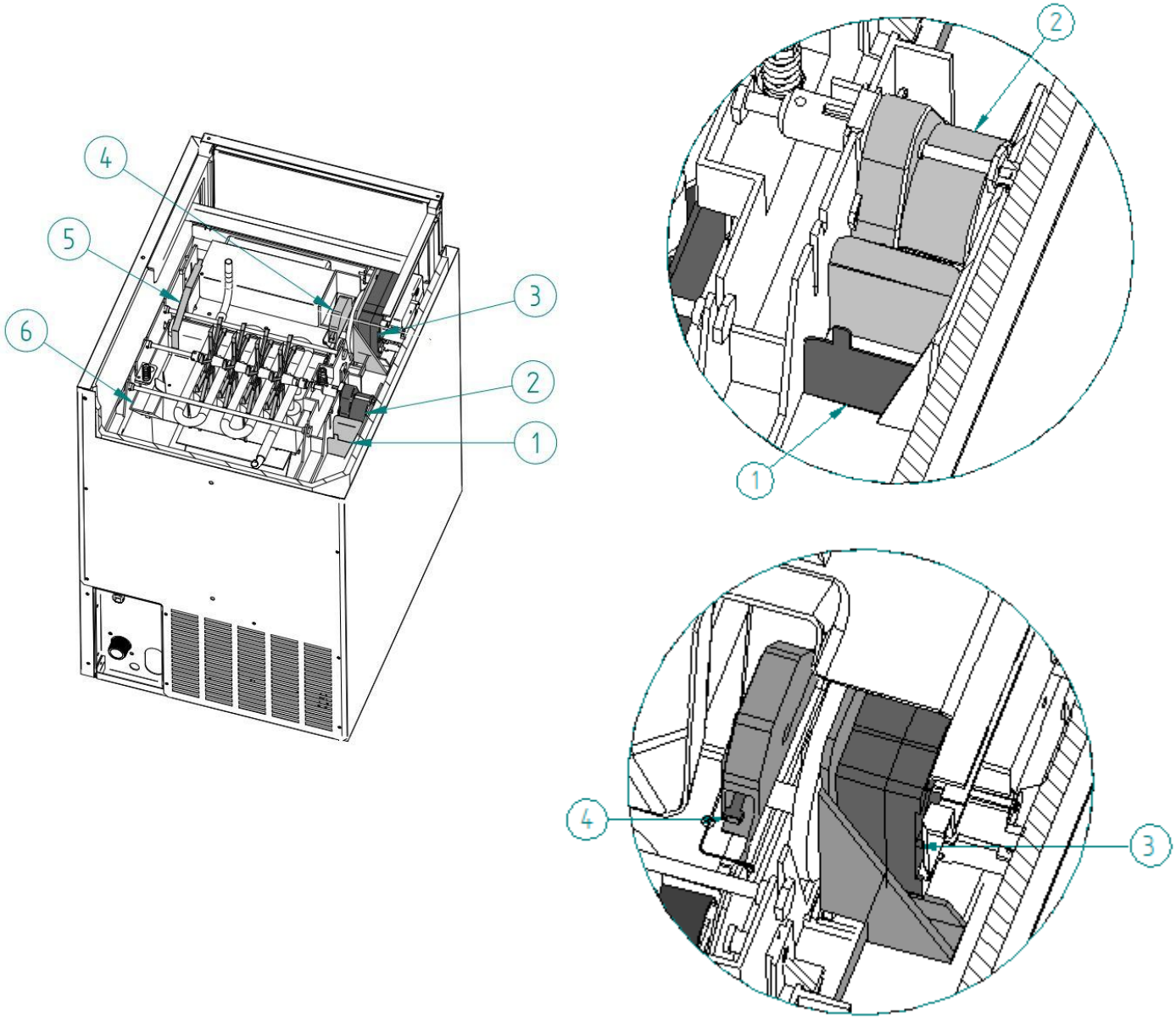

Then, the production time starts, and the ice cubes start to shape in the evaporator until the paddles touch the ice, tilt the motor and contact the Paddle Micro-Switch (EA) plate. Then the Paddle Motor (A) stops and the Pan Cam Motor (V) and the Hot gas Valve (GC) starts, making the harvest cycle begin.

Water tray tilts down. residual water is drained and the ejection plate put out the cubes.

Tray arrives to up position, refill water and start a new cycle.

During harvest, hot gas and compressor time is adjusted by the 1-3 microswitches at PCB.

Full bin stop.

When the ice bin is full, at the down way of tray, it touches the ice. The safety switchEPa placed at tray arm acts and all the machine go off. When ice is removed, tray gets free and starts again to initiate a new cycle.

4.1. CONTROL BOARD

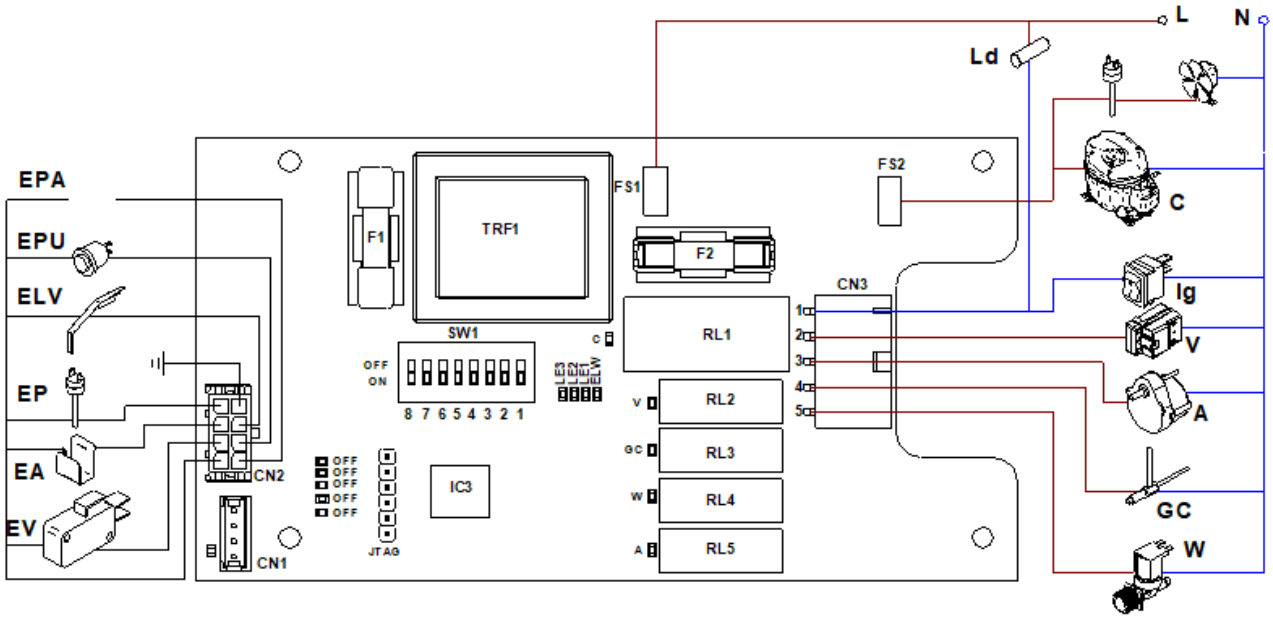

PCB connections	
Outputs	
C	Compressor
A	Paddle Motor
V	Pan Cam Motor
Ld	Power ON LED
W	Water inlet valve
GC	Hot gas valve.
F	Fan
Inputs	
EPA	Safety-full bin Micro-Switch
EP	High pressure cut-out
EPU	Push-button - water tray drain
ELW	Water Level Sensor
EA	Paddle Touch plate
EV	Ccam Micro-Switch
Ig	Power switch
Pc	Fan Control Switch

LED signalling

Next to each out relay there is an orange led. Signals relay on

Next to each input terminal there is an orange led marking input active.

There are three additional red leds that signals machine status (continuous) or alarm (flashing)

		DESCRIPTION
LE1	Continuous	Production Time
	Flashing	High pressure cut-out OPEN.
LE2	Continuous	Harvest Time
	Flashing)	• Timeout: Water Inlet. Simple Flashing • Timeout: If during the production time, the water level electrode loses the signal. Double Flashing
LE3	Continuous	Full Stock.
	Flashing	• Timeout: production time exceed. Simple Flashing • Timeout: Pan cam Micro-Switch locked .Double flashing

Dip switches setting

DIP	DESCRIPTION (* factory setting)
1-3	Hot gas time. See table
4	High Pressure switch ON(*)= automatic reset
5-8	Not used

Hot gas time				
Nº valor	**SW1-3**			**Sec.**
	1	**2**	**3**	
1	off	off	off	10
2	on	off	off	15
3	off	on	off	20
4	on	on	off	30
5	off	off	on	40
6	on	off	on	40
7	off	on	on	40
8	on	on	on	40

4.2.- ALARMS

They detect operational malfunctions. They are indicated with the flashing status Leds LE1-3. During some alarms a second operation retry attempt is carried out and if repeated again, the machine will stop. Signaling should be indicated since the first failure occurs. If the second retry attempt is ok, the signaling will switch off.
In case that a machine stop has been caused by alarm, the reset is done by switching OFF and ON the main switch.

4.2.1 SAFETY HIGH PRESSURE SWITCH

When the pressure switch (P) trips, instantly, all outputs switch over to off position.
When it is closed again, there are two possibilities:

- Dip-switch 4 OFF. Manual reset. The machine remains stopped until reset to Initial start-up.

- Dip-switch 4 ON (factory setting) . Automatic reset. The machine check pressure switch status every 30 min. When closed, the machine will continue at the position where it was.

* Signalling: Flashing LE1.

4.2.2 WATER INLET TIMEOUT

4.2.2.1 LE2 Single flashing

If the time to fill the water tray is longer than 5 min then activate the Low Water alarm and machine go OFF. Every 30 min. try to fill the tray, when the water level is reached, the cycle continues. Normal cause is lack of water input.

4.2.2.2 LE2 Double flashing

If during the production time (before harvest) the water level sensor lose signal, show alarm. Keep cycle working, just signal.

4.2.3 PRODUCION TIME TIMEOUT

4.2.3.1 Long production time (LE3 Simple Flashing)

Activated when freeze cycle last more than one hour. Pulse plate EA is not activated. Machine go OFF.

Normal cause is not refrigeration system working

4.2.3.2 Pulse plate EA blocked (LE3 Double flasing)

Activated when at the end of the cam wheel turn EA continues closed. Machine go OFFAll relays OFF.

Normal cause is agitator motor blocked.

4.3 FRONT PUSH BUTTON FUNCTION (LONG STOP DRAIN)

When the machine is going to be off for a time, is better keep the tray empty of water for sanitary reason.

For this purpose, open the door, press and release the front button.

The tray will go down and up but not refilled. Then switch off the power front switch.

5 Refrigeration diagram

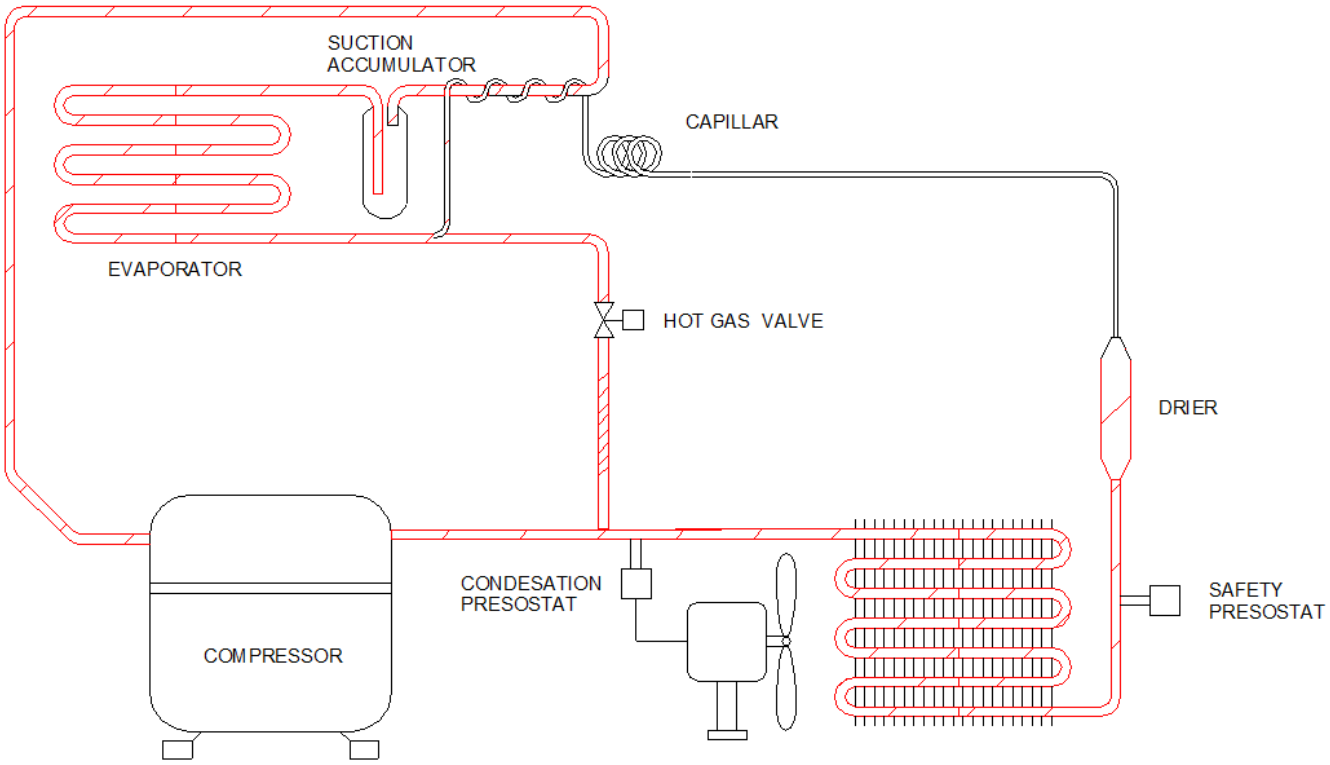

6 MAINTENANCE AND CLEANING PROCEDURES

It is the User's responsibility to keep the ice machine and ice storage bin in a sanitary condition. Ice machines also require occasional cleaning of their water systems with a specifically designed chemical. These chemical dissolves mineral build up that forms during the ice making process. Sanitize the ice storage bin as frequently as local health codes require, and every time the ice machine is cleaned and sanitized.

The ice machine's water system should be cleaned and sanitized at least twice a year.

CAUTION: Do not mix Ice Machine Cleaner and Sanitizer solutions together.

WARNING: Wear rubber gloves and safety goggles when handling Ice Machine Cleaner or Sanitizer.

WARNING: Unit should always be disconnected during maintenance/cleaning procedures.

6.1.- CLEANING WATER TRAY

a) Set the switch to the OFF position after ice falls from the evaporator at the end of a harvest cycle or set the switch to the OFF position and allow the ice to melt off the evaporator.

CAUTION: Never use anything to force ice from the evaporator.

b) Remove all ice from the bin.

c) Remove the top panel.

d) To empty the water tray (#2) open the front door, press and release the button placed at the internal steel front (#1). Water tray will tilt and go up again. Then switch off the front main switch.

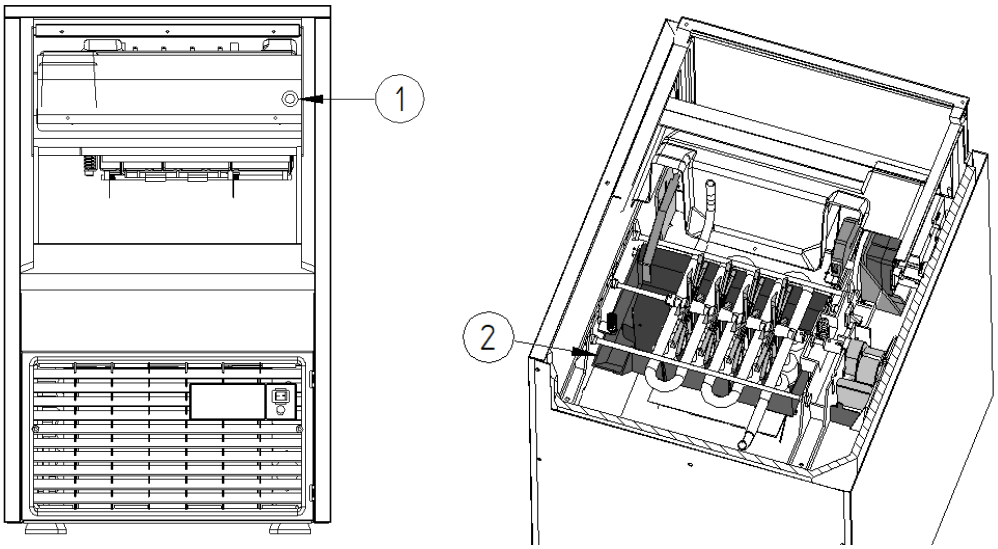

e) Prepare a solution of an appropriate product for the cleaning of ice machines (lime). Do not use hydrochloric acid. We recommend the use of any approved scale removal product prepared according to the manufacturer's instructions as for example Scale Kleen.
f) Fill water tray with the solution And leave it stand for 30-40 min.
g) Empty the water tray again by pushing the buttom.
h) Mix enough cleaning solution (as in point **e**) to clean parts and interior food zone surfaces.
i) Clean all surfaces of the shield (#3) with the cleaner solution using a brush (not a wire brush) or cloth. Rinse all areas with water.
j) Clean all the interior surfaces of the freezing compartment (including storage bin) with the cleaner solution using a brush or cloth. Rinse all areas with water.
k) Mix a solution of sanitizer using approved (EPA/FDA) sodium hypochlorite food equipment sanitizer to form a solution with 100 - 200 ppm free chlorine yield. Below an example to calculate the proper quantity of sanitizer to add to the water, for a household bleach 12,5%:

$$\text{bleach to add} \Rightarrow \frac{15}{\%\text{dis}} = \frac{15}{12.5} = 1.2\,\text{gr/L} \rightarrow *0.133 = 0.16\,\text{oz/gal}$$

l) Sanitize all the interior surfaces of the freezing compartment (including the storage bin) applying liberally sanitizer solution, using a cloth or sponge.
m) Fill water tray with the sanitizer solution.
n) Let solution stand for 20 minutes and drain the tray.
o) Switch on machine and discard the first two harvests.

6.2.- CLEANING THE BINS

1) Disconnect the machine, close water faucet and empty storage bin of ice
2) Use the cleaner/water solution to clean all surfaces of the bin. Use a nylon brush or cloth. Then rinse all areas thoroughly with clean water.
3) Use the sanitizer/water solution to sanitize all surfaces of the bin. Use a nylon brush or cloth.
4) Rinse with plenty of water, dry, run the machine and open water faucet.

6.3.- CLEANING THE CONDENSER

AIR CONDENSER

1. Disconnect the machine.
2. Disconnect the water inlet or close the tap.
3. Clean the louvered area with the help of an aspirator with a brush, non-metallic brush or low-pressure air.
4. Remove the front grid by pressing the two clips placed at right side (see figure).
5. Clean condenser using a vacuum cleaner, soft brush or low pressure air. Clean from top to bottom, not side to side. Be careful not to bend the condenser fins.

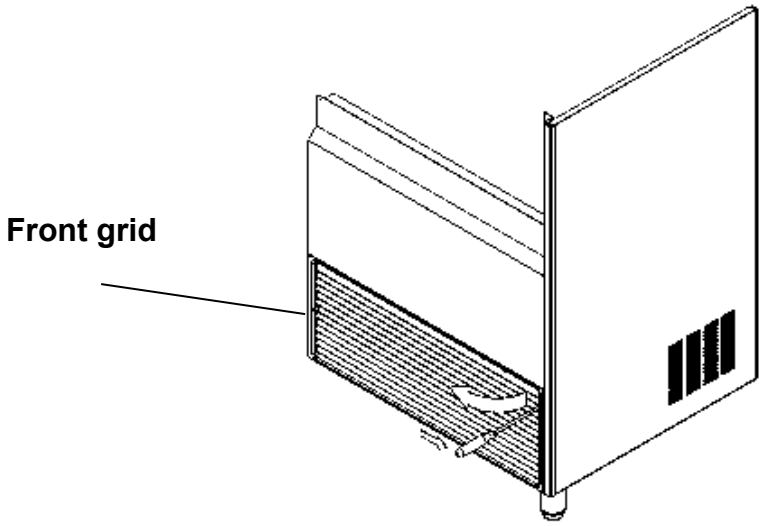

WATER CONDENSER

1. Disconnect the machine.
2. Disconnect the water inlet and outlet from the condenser.
3. Prepare a solution at the 50% of phosphoric acid and distilled or demineralized water.
4. Make the solution circulate through the condenser. (The solution is more effective if hot - between 35ºC [95ºF] and 40ºC [104ºF]).

6.4.- EXTERNAL CLEANING OF THE MACHINE

Clean the area around the ice machine as often as necessary to maintain cleanliness. Sponge any dust and dirt off the outside of the ice machine with mild soap and water. Wipe dry with a clean soft cloth. A commercial grade stainless steel cleaner/polish can be used as necessary.

6.5.- WATER LEAKAGE CHECKING

This must be done whenever maintenance is carried out on the machine: check all water connexions, braces, tubes and hoses in order to eliminate leaks and prevent breakages and flooding.

6.6.- MAINTENANCE TABLE

IMPORTANT!

**Maintenance and cleaning procedures as well as problems derived from failing to carry them out are not covered by the warranty.

Proper maintenance is essential to obtain favourable ice quality and optimum functioning of unit. Frequency depends on water quality and characteristics of room where unit is installed.

** Maintenance/cleaning procedures should take place at least once every six months. If concentration of air pollutants is high, complete procedures on a monthly basis.

PROCEDURE	MONTHLY	QUARTERLY	BIANNUAL	YEARLY	BIENNIAL	DURATION
Air condenser cleaning	0000	0000	****	****	****	30 minutes
Water condenser cleaning				####	****	90 minutes
Water circuit cleaning		####	####	****	****	45 minutes
Sanitary cleaning		####	####	****	****	30 minutes
Water filter cleaning/replacement	####	####	****	****	****	30 minutes
Stock deposit cleaning.	&&&	&&&	&&&	&&&	&&&	--
Unit cleaning	&&&	&&&	&&&	&&&	&&&	--

0000 Depending on room characteristics

Depending on water quality

&&& Carried out by owner

**** Essential

Maintenance and cleaning procedures as well as problems derived from failing to carry them out **ARE NOT COVERED BY THE WARRANTY.** Service personnel will invoice you for travel expenses, time invested and materials required for maintenance and cleaning of unit.

7 USER TROUBLESHOOTING GUIDE

PROBLEM	POSSIBLE CAUSES	SOLUTION
None of the electrics work. Front switch ON but pilot is OFF	The machine is not plugged in.	Plug the machine and verify socket power
None of the electrics work. Front pilot is ON	Full bin status (LE3 on) with no ice. Faulty or bad adjusted try arm switch EPA	Adjust / replace
	PCB alarm.	Check led code
PCB alarms. See point 4.2		
High pressure switch (LE1)	Dirty condenser	Clean condenser
	Defective fan	Check. Replace
	Defective safety/cooling pressure switch	Check. Replace
Water inlet timeout (single flashing LE2)	No water input	Check supply and water valve operation
	Dirty water level probe	Check and clean
Water level lost (double flashing LE2)	Water pan leak	Check / seal / replace
Freeze cycle timeout (single flashing LE3)	Faulty refrigeration system. No ice is formed	Check. Repare
	Faulty agitator motor	Check / replace
	Blocked agitator motor (no plate contact)	Check free hangling
Pulse EA plate blocked (double flashing LE3)	Blocked agitator motor (plate contact)	Check free hangling
The machine does not stop though the bin is full of cubes. or Tray stops but is not touching bin ice	Faulty connecting rod micro-switch or in wrong position.	Check micro-switch. Position it correctly.
	Wrong pressure on this micro-switch spring.	Check spring pressure.
Too short cubes	Water level too low	Adjust probe
Too thin cubes – Uniform	Agitator paddles not centered	Check / Adjust
	Low refrigeration performance	Check refrigeration system
Too thin cubes – Not Uniform	Poor refrigerator performance	
Not all cubes are released	Hot gas time too short	Adjust by dip-switches
	Dirty evaporator fingers	Check / clean
	Faulty hot gas valve	Check / replace
	Faulty fan pressostat (non stop)	Check / replace
Low ice production	Blocked condenser or air access to condenser	Clean condenser; improve air circulation
	Faulty hot gas valve, doesn't close totaly.	Replace
	Low performance refrigeration system	Check
All the electrics work except compressor.	Faulty contact.	Check wiring.
	Faulty relay .	Replace relay.
	Faulty "Klixon".	Replace Klixon.
	Faulty compressor.	Replace compressor.
All the electrics work but the compressor "klixons" (cycles intermitenttly).	Voltage too low.	Check voltage.
	Obstruction in air circulation.	Move machine to a correct position.
	Start / run capacitor faulty.	Replace condenser.
	Cooling presostat faulty or wrongly adjusted.	Replace or adjust presostat.